EQUIPMENT, DESIGN & SERVICE MANUAL

HFC-227-ea CLEAN AGENT SYSTEM

W/ IMPULSE TECHNOLOGY

EN CONTAINERS

UL / FM APPROVALS

NFPA 2001 STANDARD

U.S. & Foreign Patents

P/N 06-542 (Rev. 3 / September, 2016)

Fike®

Original Release Date: .....May, 2010

Revision / Description of Change **Revision Date**

REVISION 1..... February, 2011

EQUIPMENT SECTION

1) Remove all references to FM-200® and replace with HFC-227ea on the following Component Sheets:

   Agent – HFC-227ea (p/n 06-542-1-1 rev 1)

   Agent Storage Container – HFC-227ea (p/n 06-542-1-2 rev 1)

   Pressure Gauge– HFC-227ea (p/n 06-542-1-3 rev 1)

DESIGN SECTION

1) Remove all references to FM-200 and replace with HFC-227ea.

REVISION 2.....September, 2015

EQUIPMENT SECTION

1) Added 5, 9 & 16 liter containers to Component Sheet (06-542-1-2 rev 2)
2) Added Direct Fired Impulse Actuator (DFIA) Component Sheet (06-432-1-5-DF rev 1)
3) Added Impulse Valve Operator Supervisor (IVOS) Component Spec (06-432-1-11 rev 0)
4) Added Mounting Bracket information for 5, 9 & 16 liter containers to Component Sheet (06-540-1-5 rev 1)
5) Removed BS 1387 grade/type of pipe from Component Sheet (06-540-1-6 rev 1)
6) Added Brass Nozzles Component Sheet (06-542-1-6 rev 0) and removed Aluminum Nozzle Component Sheet (06-542-1-4)

DESIGN SECTION

1) Added 5, 9 & 16 liter cylinders to Container Size and Fill Range Table on page 6
2) Added pages 23, 24 & 25 containing information on pre-engineered limitations for 5, 9 & 16 liter cylinders

REVISION 3.....September, 2016

EQUIPMENT SECTION

1) Updated the following Component Sheets:
   a. 06-540-1-2 IVO CompSht to rev 1
   b. 06-432-1-5-DF DFIA CompSht to rev 2
   c. 06-432-1-11 IVOS CompSht to rev1

   Note editorial change: updated IVOS conduit length from 34.75” to 33.5” in Impulse Valve Operator Supervisor (IVOS) Component Spec (06-432-1-11 rev 1) and Impulse Valve Operator (IVO) Kit w/ IRM Component Sheet (06-540-1-2 rev 1).

While every precaution has been taken during the preparation of this document to ensure the accuracy of its content, Fike assumes no responsibility for errors or omissions. Fike reserves the right to make changes to the product or this document without notice.

TABLE OF CONTENTS

INTRODUCTION.....2 Pages

EQUIPMENT SECTION

Part Number	Revision Level	Description of Component Sheet	Number of Pages
06-542-1-1	1	Agent – HFC-227ea	2
06-542-1-2	2	Agent Storage Container – HFC-227ea	6
06-540-1-1	0	Impulse Valve	2
06-542-1-3	1	Pressure Gauge – HFC-227ea	2
06-540-1-2	1	Impulse Valve Operator (IVO)	6
06-432-1-5-DF	2	Direct Fired Impulse Actuator (DFIA)	6
06-432-1-11	1	Impulse Valve Operator Supervisor (IVOS)	2
06-540-1-3	0	Impulse Valve Pneumatic Operator (IVPO)	2
06-540-1-4	0	Low Pressure Switch	2
06-540-1-5	1	Mounting Straps & Brackets	1
06-540-1-6	1	Pipe and Fitting	4
06-540-1-7	0	Discharge Pressure Switch	2
06-542-1-6	0	Discharge Nozzles – HFC-227ea	4
06-540-1-8	0	Check Valve	2
06-542-1-5	0	Caution / Advisory Signs – HFC-227ea	2

DESIGN SECTION ..... 30 Pages

Hazard Classification 1
Minimum Design Concentration 1
Maximum Design Concentration 1
Enclosure Volume 2
Agent Required 2
Flooding Factors – Agent vs Temperature Chart (Metric Units) 3
Tee Design Factor 4
Altitude Correction Factors 5
Concentration at Maximum Temperature 5
System Design Concepts 6
Container Size and Fill Range 6
Temperature Limitation 6
System Discharge Time 7
Nozzle Flow Rate Limitation 7
Nozzle Area Coverage 7
Nozzle Placement 8
Ceiling Height vs. Levels of Nozzles 9
Maximum Elevation Differences in Pipe Runs Limitation 9
Nozzle Discharge Obstructions 10

While every precaution has been taken during the preparation of this document to ensure the accuracy of its content, Fike assumes no responsibility for errors or omissions. Fike reserves the right to make changes to the product or this document without notice.

Tee Split Ratios 10
Tee Configuration – Bullhead 10
Tee Configuration – Side-Thru 10
Tee Orientation 11
Estimating Pipe Size 12
Minimum Piping Distance 12
Equivalent Length Values 13
Pipe Network Limitations 14
Percent of Agent in Pipe 14
Location of 1ST Tee 14
Liquid Arrival Time 14
Liquid Runout Time 15
Nozzle Orifice Area Limitation 15
Manifold Options 15
Sample Problem – Engineered 16
Hazard Information 16
Inputs – Fike Flow Calculation Program 17
Outputs – Fike Flow Calculation Program 21
Pre-Engineered Piping Limitations 28
Nozzle Types – Pre-Engineered 29
Piping Network Limitations – Single Nozzle Systems 29
Piping Network Limitations – Two Nozzle Systems 30

SERVICE SECTION ..... 5 Pages
HAZARD ENCLOSURE 1
System Checkout 1
Maintenance 2
SYSTEM COMPONENTS 2
Agent Storage Container & Accessories 2
System Checkout 2
Maintenance 3
Pipe & Fittings 3
System Checkout 3
Maintenance 4
Discharge Nozzle 4
System Checkout 4
Maintenance 4
Detection & Control System 4
3” Check Valve Damper Replacement Procedure 5

ANNEX MATERIAL
Safety Data Sheets
HFC-227ea Agent ..... 11 Pages
Nitrogen ..... 8 Pages

While every precaution has been taken during the preparation of this document to ensure the accuracy of its content, Fike assumes no responsibility for errors or omissions. Fike reserves the right to make changes to the product or this document without notice.

INTRODUCTION

Fike's Equipment, Design and Service Manuals for Clean Agent Fire Suppression Systems incorporates the latest design requirements found in NFPA Standard 2001, as well as the most up-to-date information available for our products.

This manual has been provides the information necessary for the design, installation, and service / maintenance of Fike hardware and systems.

Fike utilizes two types of systems:

"Pre-Engineered System" concept – minimizes the engineering effort required to design an effective system. As long as nozzle selection, pipe size and pipe length limitations are adhered to, hydraulic flow calculations are not required.

"Engineered System" concept – These systems are designed within the basic parameters outlined in this manual, and their performance is evaluated with the assistance of the Fike Flow Calculation Program.

Tests have shown that the Fike Flow Calculation Program can accurately determine the expected performance of the system when it is discharged. This provides the system designer with the maximum degree of flexibility possible as it pertains to flow imbalance, tee splits, piping configurations, etc.

Fike Clean Agent Fire Suppression systems must be installed and maintained in accordance with the limitations established by the appropriate Code or Standard (e.g. ISO 14520, NFPA Standard 2001, etc.), as well as the limitations set forth by Underwriters Laboratories Inc. and FM Approvals. The information contained within this manual defines these limitations in detail.

Enough information is incorporated into this manual to allow those responsible for designing Fike Clean Agent Fire Suppression systems to properly do so, and for the parties responsible for verifying the system design to determine if the design parameters have in deed been met.

Any questions concerning the information presented in this manual should be addressed to:

704 South 10th Street
P.O. Box 610
Blue Springs, Missouri 64013 (U.S.A.)
Phone: (816) 229-3405
Fax: (816) 229-5082
Webpage: www.fike.com

COPYRIGHT INFORMATION

This document may not be reproduced, in whole or in part, by any means without the prior express written permission of the copyright owner. All Fike documentation and hardware are copyrighted with all rights reserved.

Fike® is a registered trademark of Fike.

DISCLAIMERS

The information contained in this manual is as accurate as possible. Fike does not guarantee that this manual is technically correct, complete, or free from writing problems or that this product is free from minor flaws.

In accordance with our policy of continuing product and system improvement, Fike reserves the right to change designs or specifications without obligation and without further notice.

While every precaution has been taken during the preparation of this document to ensure the accuracy of its content, Fike assumes no responsibility for errors or omissions. Fike reserves the right to make changes to the product or this document without notice.

READER RESPONSES

Fike encourages input from our distributors and end users on how we can improve this manual and even the product itself. Please direct all calls of this nature to Fike's Systems Sales Department at (800)-979-FIKE (3453), option 22.

Any communication received becomes the property of Fike.

WARRANTIES

Fike provides a one-year limited manufacturer's warranty on this product. The standard warranty is printed in each Marketing Price List. All warranty returns must be returned from an authorized Fike Distributor. Contact Fike's Marketing Department for further warranty information. Fike maintains a repair department that is available to repair and return existing electronic components or exchange/purchase previously repaired inventory component (advance replacement). All returns must be approved prior to return. A Material Return Authorization (MRA) number should be indicated on the box of the item being returned. Contact the appropriate Regional Sales Manager for further information regarding Return Material Procedures.

LIMITATION OF LIABILITY

Fike cannot be held liable for any damages resulting from the use or misuse of this product.

QUALITY NOTICE

Fike has maintained ISO 9001 certification since 1996. Prior to shipment, we thoroughly test our products and review our documentation to assure the highest quality in all respects.

While every precaution has been taken during the preparation of this document to ensure the accuracy of its content, Fike assumes no responsibility for errors or omissions. Fike reserves the right to make changes to the product or this document without notice.

FIKE CLEAN AGENT SYSTEM
W/ IMPULSE TECHNOLOGY
HFC-227EA AGENT
EN CONTAINERS

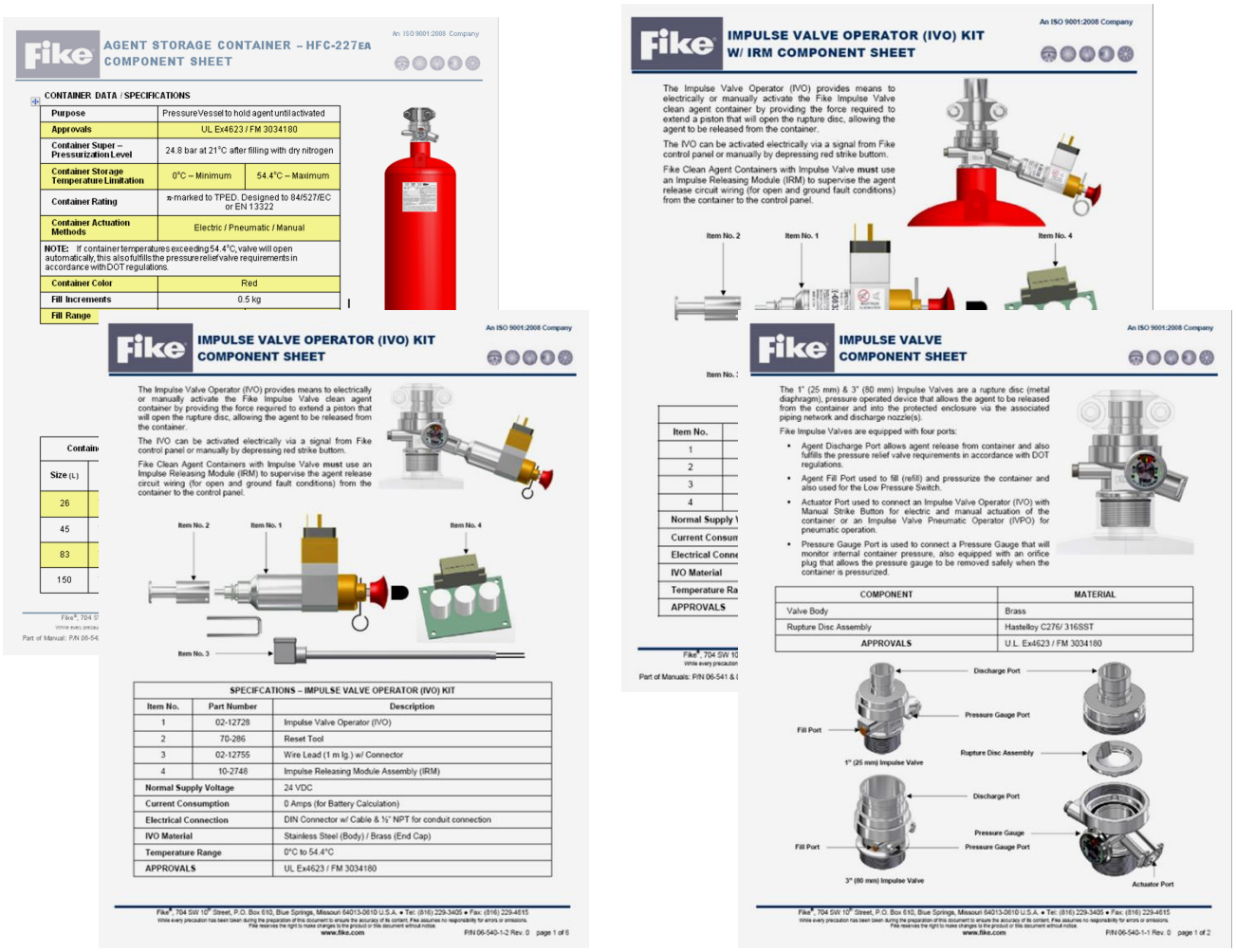

AGENT STORAGE CONTAINER – HFC-227EA
COMPONENT SHEET

CONTAINER DATA / SPECIFICATIONS

Purpose	Pressure Vessel to hold agent until activated	
Approvals	UL Ex4623 / FM 3034180	
Container Super – Pressurization Level	24.8 bar at 21°C after filling with dry nitrogen	
Container Storage Temperature Limitation	0°C – Minimum	54.4°C – Maximum
Container Rating	π-marked to TPED. Designed to 84/527/EC or EN 13322	
Container Actuation Methods	Electric / Pneumatic / Manual	
NOTE: If container temperatures exceeding 54.4°C, valve will open automatically, this also fulfills the pressure relief valve requirements in accordance with DOT regulations.		
Container Color	Red	
Fill Increments	0.5 kg	
Fill Range		

IMPULSE VALVE OPERATOR (IVO) KIT
COMPONENT SHEET

The Impulse Valve Operator (IVO) provides means to electrically or manually activate the Fike Impulse Valve clean agent container by providing the force required to extend a piston that will open the rupture disc, allowing the agent to be released from the container.

The IVO can be activated electrically via a signal from Fike control panel or manually by depressing red strike buttom.

Fike Clean Agent Containers with Impulse Valve **must** use an Impulse Releasing Module (IRM) to supervise the agent release circuit wiring (for open and ground fault conditions) from the container to the control panel.

Item No. 2 Item No. 1 Item No. 4 Item No. 3

SPECIFICATIONS – IMPULSE VALVE OPERATOR (IVO) KIT

Item No.	Part Number	Description
1	02-12728	Impulse Valve Operator (IVO)
2	70-286	Reset Tool
3	02-12755	Wire Lead (1 m lg.) w/ Connector
4	10-2748	Impulse Releasing Module Assembly (IRM)
Normal Supply Voltage		24 VDC
Current Consumption		0 Amps (for Battery Calculation)
Electrical Connection		DIN Connector w/ Cable & ½" NPT for conduit connection
IVO Material		Stainless Steel (Body) / Brass (End Cap)
Temperature Range		0°C to 54.4°C
APPROVALS		UL Ex4623 / FM 3034180

IMPULSE VALVE
COMPONENT SHEET

The 1" (25 mm) & 3" (80 mm) Impulse Valves are a rupture disc (metal diaphragm), pressure operated device that allows the agent to be released from the container and into the protected enclosure via the associated piping network and discharge nozzle(s).

Fike Impulse Valves are equipped with four ports:

- Agent Discharge Port allows agent release from container and also fulfills the pressure relief valve requirements in accordance with DOT regulations.
- Agent Fill Port used to fill (refill) and pressurize the container and also used for the Low Pressure Switch.
- Actuator Port used to connect an Impulse Valve Operator (IVO) with Manual Strike Button for electric and manual actuation of the container or an Impulse Valve Pneumatic Operator (IVPO) for pneumatic operation.
- Pressure Gauge Port is used to connect a Pressure Gauge that will monitor internal container pressure, also equipped with an orifice plug that allows the pressure gauge to be removed safely when the container is pressurized.

COMPONENT	MATERIAL
Valve Body	Brass
Rupture Disc Assembly	Hastelloy C276/ 316SST
APPROVALS	U.L. Ex4623 / FM 3034180

Discharge Port, Pressure Gauge Port, Fill Port, Rupture Disc Assembly, 1" (25 mm) Impulse Valve, Discharge Port, Pressure Gauge, Pressure Gauge Port, Fill Port, 3" (80 mm) Impulse Valve, Actuator Port

While every precaution has been taken during the preparation of this document to ensure the accuracy of its content, Fike assumes no responsibility for errors or omissions. Fike reserves the right to make changes to the product or this document without notice.

HFC-227EA CLEAN AGENT COMPONENT SHEET

CLEAN AGENT

Chemical Name	Heptafluoropropane
ASHRAE Designation	HFC-227ea
APPROVALS	UL Ex4623 / FM 3024180 / LPCB
FEATURES AND BENEFITS	Colorless, odorless, liquefied compressed gas
	Stored as a liquid
	Electrically-nonconductive
	Discharges as a gaseous vapor (due to its relatively low boiling point)
	Zero ozone depleting potential
	Low global warming potential
	Included on the U.S. EPA Significant New Alternative Policy (SNAP) rules

EXTINGUISHING METHOD

HFC-227ea extinguishes a fire primarily through Heat Absorption that occurs as the agent changes from a liquid to a vapor during discharge. In addition, HFC-227ea also disrupts the combustion reaction which aids in the extinguishment of a fire. It is important to note, HFC-227ea does not use the depletion of oxygen to extinguish a fire.

USE AND LIMITATIONS

HFC-227ea system shall be used on the following Class of Hazards:	**HFC-227ea systems shall "NOT" be used on fires involving the following materials:**
Class A & C: Electrical and Electronic Hazards Telecommunications Facilities High value assets, where the associated down-time would be costly	Chemicals or mixtures of chemicals that are capable of rapid oxidation in the absence of air. (Examples include: Cellulose Nitrate and Gunpowder)
	Reactive metals such as Lithium, Sodium, Potassium, Magnesium, Titanium, Zirconium, Uranium, and Plutonium
Class B: Flammable liquids and gases	Metal hydrides such as Sodium Hydride and Lithium Aluminum Hydride
	Chemicals capable of undergoing auto-thermal decomposition. (Examples: Organic Peroxides and Hydrazine)

EXPOSURE LIMITATIONS

Hazard Type	Design Concentration	Maximum Human Expose Time
Normally Occupied Space	6.25% to 10.5%	5 minutes
Not Normally Occupied Space	11.0% to 12.0%	30 seconds

NOTE: Fike does not recommend HFC-227ea systems to be used in any normally occupied spaces where the design concentration required is above **10.5%.**

While every precaution has been taken during the preparation of this document to ensure the accuracy of its content, Fike assumes no responsibility for errors or omissions.
Fike reserves the right to make changes to the product or this document without notice.

WARNING: The discharge of clean agent systems to extinguish a fire can result in potential hazard to personnel from the natural form of the clean agent or from the products of combustion that result from exposure of the agent to the fire or hot surfaces. Unnecessary exposure of personnel either to the natural agent or to the products of decomposition shall be avoided.

PHYSICAL PROPERTIES OF HFC-227ea

Chemical Name	1,1,1,2,3,3,3-Heptafluoropropane
Chemical Formula	CF_3 $CHFCF_3$
CAS No.	431-89-0
Molecular Wt.	170.03
Boiling Point, 1 atm	-15.6 ^oC
Freezing Point	-133 ^oC
Critical Temperature	101.7 ^oC
Critical Pressure	2930.6 kPa
Critical Density	621 kg/m^3
Liquid Density @ 25 ^oC	1386 kg/m^3
Vapor Density @ 25 ^oC and 1atm	7.148 kg/m^3
Specific Heat, Liquid (Cp) @ 25^oC	1.247 kJ/kg- ^oC
Specific Heat, Vapor (Cp) @ 25^oC and 1 ATM	0.8136 kJ/kg- ^oC
Vapor Pressure, Saturated @ 25^oC	453.3 kPa
Heat of Vaporization @ B.P.	132.6 kJ/kg- ^oC
Thermal Conductivity, Liquid @ 25^oC	0.0533 W/m- ^oC
Thermal Conductivity, Vapor @ 25^oC	0.0127 (0.0073) W/m- ^oC
Viscosity, Liquid (lb/ft-hr) @ @ 25^oC	0.2442 cP
Relative dielectric strength @ 1atm, 25 ^oC (N_2 =1)	2.00
Solubility of Water in HFC-227ea @ 20 ^oC	600 ppm
Ozone Depletion Potential	0.0
Global Warming Potential, GWP (100 yr. ITH. For CO2, GWP = 1)	2900

AGENT STORAGE CONTAINER – HFC-227EA COMPONENT SHEET

CONTAINER DATA / SPECIFICATIONS

Purpose	Pressure Vessel to hold agent until activated	
Approvals	UL Ex4623 / FM 3034180	
Container Super – Pressurization Level	24.8 bar at 21°C after filling with dry nitrogen	
Container Storage Temperature Limitation	0°C – Minimum	54.4°C – Maximum
Container Rating	π-marked to TPED. Designed to or EN 13322-1	
Container Actuation Methods	Electric / Pneumatic / Manual	
NOTE: If container temperatures exceeding 54.4°C, valve will open automatically, this also fulfills the pressure relief valve requirements in accordance with DOT regulations.		
Container Color	Red	
Fill Increments	0.5 kg	
Fill Range	641 kg/m³ (maximum)	1121 kg/m³ (maximum)



Container		Fill Range		Valve Size	Tare Weight	Dimensions (approximate)		Mounting Position
Size (L)	P/N	Minimum	Maximum			Diameter	Height	
		(kg)	(kg)	in. (mm)	(kg)	(mm)	(mm)	
5	70-348	3.5	5.5	1 (25)	11	178	414	Upright (Valve Up)
9	70-349	6.0	10.0	1 (25)	13	178	609	Upright (Valve Up)
16	70-350	10.5	17.5	1 (25)	16	229	635	Upright (Valve Up)
26	70-278	17.0	29.0	1 (25)	23	229	876.3	Upright (Valve Up)
45	70-255	29.0	50.0	1 (25)	35	324	816.0	Upright (Valve Up)
83	70-256	53.5	93.0	3 (80)	62	324	1316.0	Upright (Valve Up)
150	70-257	96.5	168.0	3 (80)	82	406	1483	Upright (Valve Up)

While every precaution has been taken during the preparation of this document to ensure the accuracy of its content, Fike assumes no responsibility for errors or omissions. Fike reserves the right to make changes to the product or this document without notice.

ITEMS SUPPLIED WITH CONTAINER ASSEMBLY

Item Number	Description	Component Sheet
1	Shroud	- - -
2	Victaulic Coupling & Nipple	06-540-1-6
3	Impulse Valve	06-540-1-1
4	Pressure Gauge	06-542-1-3
5	Nameplate (see note 1)	n/a
6	Siphon Tube (see note 2)	n/a
7	Mounting Straps & Brackets (not shown)	06-540-1-5

NOTES:

1) Fike nameplate provides the information that is specific to each container:
   Assembly and serial number of the container, Weight information: tare, gross and agent and Installation, operation and safety information.
   All containers filled either by the factory or by an Approved Initial Fill Station are provided with a nameplate bearing the approval agency markings.
2) All containers have straight siphon tubes and must be mounted upright (valve up).

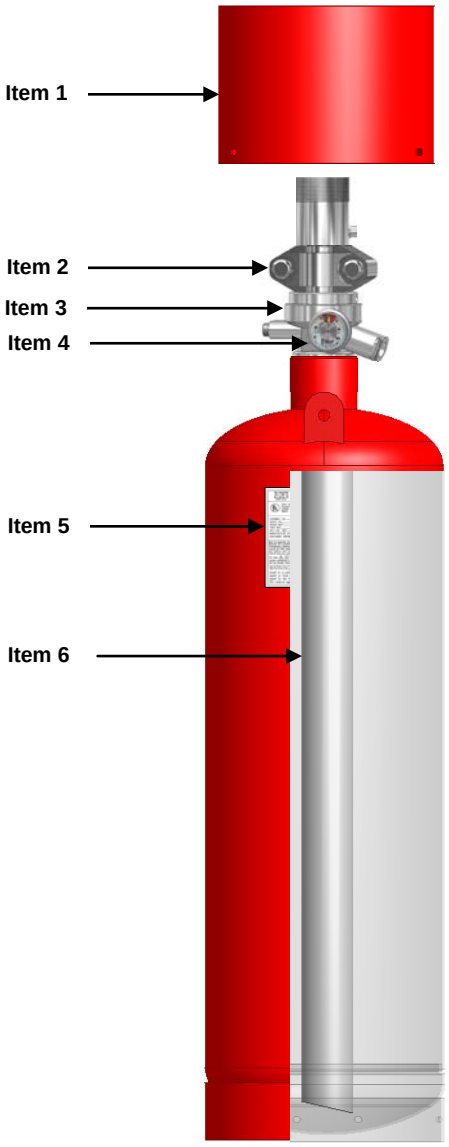

OPTIONAL ITEMS FOR CONTAINER

The following container accessory items must be ordered separately.

ACTUATION COMPONENTS

- Electric / Manual Actuation – Impulse Valve Operator (IVO) or Direct Fired Impulse Actuator (DFIA)
  (For detailed information, refer to the IVO Component Sheet (p/n 06-540-1-2) or DFIA Component Spec (p/n 06-432-1-5-DF)

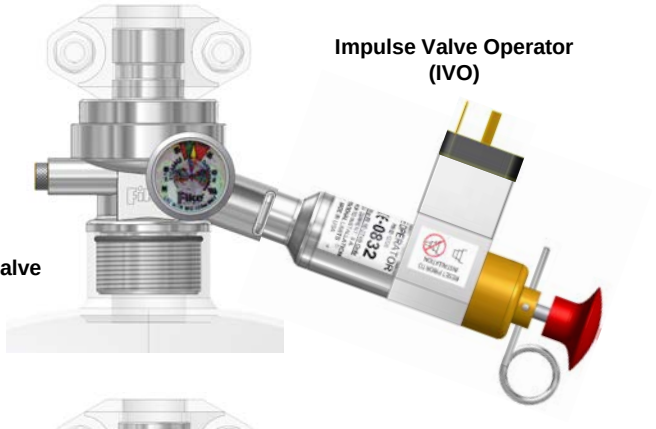

Impulse Valve Operator (IVO)

Container w/ Impulse Valve

- Pneumatic Actuation – Impulse Valve Pneumatic Operator (IVPO) (For detailed information, refer to the IVPO Component Sheet p/n 06-540-1-3)

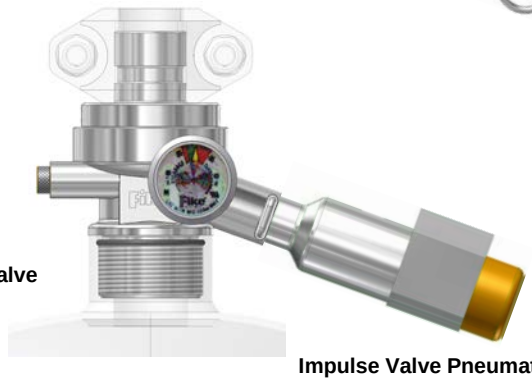

Container w/ Impulse Valve

Impulse Valve Pneumatic Operator (IVPO)

ACTUATION METHODS

Clean Agent containers with an Impulse Valve can be actuated by the following methods.

- Method 1 – Electric Actuation – Single Container System w/ IVO & IRI or DFIA
- Method 2 – Electric Actuation – Multi-Containers System w / IVO's & IRI's or DFIA's
- Method 3 – Electric & Pneumatic Actuation – Two Container System w/ IVO & IVPO or DFIA & IVPO
- Method 4 – Electric & Pneumatic Actuation – Multi Container System w/ IVO & IVPO's or DFIA & IVPO's

For detailed information on actuation methods, refer to the Impulse Valve Operator (IVO) Component Sheet (p/n 06-540-1-2) or Direct Fired Impulse Actuator (DFIA) Component Sheet (p/n 06-432-1-5-DF).

These devices provide the force required to extend a pin that will open the rupture disc, allowing the agent to be released from the container.

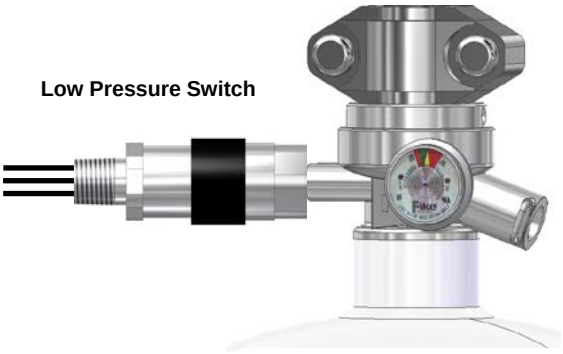

Low Pressure Switch

Container w/ Impulse Valve

LOW PRESSURE SWITCH

The Low Pressure Switch provides a means to continuously monitoring the container pressure for a low-pressure condition.

If the pressure inside the container drops below 20 bar, the switch contacts will transfer and invoke a "trouble" indication on the control panel.

The Low Pressure Switch (P/N 02-12533) has a single pole, double-throw switch that can be wired for normally open or normally closed.

For detailed information, refer to the Low Pressure Switch Component Sheet (p/n 06-540-1-4).

INSTALLATION

The system installation must comply with the requirements of this manual; NFPA 2001, latest edition; all applicable local codes, regulations, and standards and the authority having jurisdiction (AHJ).

WARNING: **DO NOT** start system installation until the final design of the total system has been verified using Fike's Engineered Flow Calculation.

WARNING: The Actuator shall **always** be the last component installed on a Fike Clean Agent Fire Suppression system to avoid accidental discharge.

FACTORS TO CONSIDER – CONTAINER LOCATION

FACTOR	CONSIDERATION
MOUNTING SURFACE	Container brackets must be mounted securely to solid load-bearing surfaces that will support the container load. Some installations may require additional mounting support not supplied by Fike.
ENVIRONMENTAL EFFECTS	Container(s) should be located in clean, dry, and relatively vibration-free areas. Avoid aisle ways and other high traffic areas where physical damage or tampering is more likely. Container(s) should never be mounted where the container could potentially be splashed with, or submerged in any liquid. Do not locate containers where they would be subject to physical damage, exposure to corrosive chemicals, or harsh weather conditions.
TEMPERATURE RANGE	Container locations must be between 0°C to 54.4^{o}C Temperatures outside of this range may result in the system not supplying the desired quantity of agent or accidental discharge.
SERVICEABILITY	In general, the larger the container, the more difficult it will be to remove it from the system for maintenance and service. However, smaller containers that are located in a sub-floor space, under a computer bank, or above the ceiling over the same computer bank can be difficult as well.
FLOOR SPACE	Consideration should be given to the space available to install the container(s).

FACTOR	CONSIDERATION
FLOOR LOADING	Floor loading must be considered when selecting a container location. The floor must be able to support the total weight of the Fike container(s) as they are moved into position. Consult raised floor manufacturer for floor loading limitation. The following guidelines are recommended: ▪ Raised floor loading is a function of the manufacturer's load specification and the positioning of the container(s) on the raised floor grid. **NOTE:** Fike cannot assume responsibility for determining the suitability of a particular raised floor system; the following does provide information to help determine installation requirements. ▪ When clean agent containers are located on a raised floor, floor integrity must be considered to determine if the type of tile and vertical floor support can handle the increased load. If necessary additional floor supports can be added. **Option:** To help distribute the container weight over a greater area, a 6.4 mm steel plate can be placed under the container(s), sized to span multiple floor supports. If container spans multiple floor tiles, add additional floor supports (Minimum of 4 floor supports, 1 per corner, must be used). Excessive floor loading may require relocating the container(s) to a more suitable location. For floor loading information refer to Table 1 or to Fike's Flow Calculation program for container size and actual fill weight being supplied.

TABLE 1 – FLOOR LOADING / AREA BY CONTAINER SIZE

Container Size (L)	**Total Container Weight** (kg) (See Note 1)	**Container Floor Area** (m^2)	**Container Floor Loading** (kg/m^2)	**Container Floor Area w/ Plate** 6.4mm x 0.6m x 0.6m plate (m^2)	**Container w/ Plate Floor Loading** (kg/m^2) (See Note 2)
150	244	0.129	**1891**	0.36	**688**
83	152	0.082	**1848**	0.36	**431**
45	84	0.082	**1018**	0.36	**242**
26	51	0.041	**1244**	0.36	**152**
16	33	0.041	**805**	0.36	**102**
9	20	0.025	**900**	0.36	**73**
5	15	0.025	**640**	0.36	**55**

NOTES:

1) Total container weight is based on container tare weight + maximum fill weight.
2) Total container weight + 10.2 kg/m^2 added for 6.4mm x 0.6m x 0.6m plate used to calculate container w/ plate floor loading.

RECHARGE ITEMS – 1" (25) & 3" (80) VALVE (Must Order Separate)

After a system has been discharged, the following items must be replaced before a container can be recharged. For a detailed procedure on recharging a Fike container w/ an Impulse Valve refer to Fike's Recharge Manual (p/n 06-543).

Item	Description	**1" (25mm) Recharge Kit** (p/n 85-047) includes the following:	**3" (80mm) Recharge Kit** (p/n 85-048) includes the following:
		Part Number	**Part Number**
1	Friction Ring	70-2060	70-2063
2	Disc Assembly	70-247	70-248
3	O-Ring	02-11987	02-11989
4	Valve Core-Fill Port (not shown)	02-4161	02-4161

NOTE: 1" (25 mm) Recharge Kit is used on 26 & 45 L containers.
3" (80 mm) Recharge Kit is used on 83 & 150 L containers.

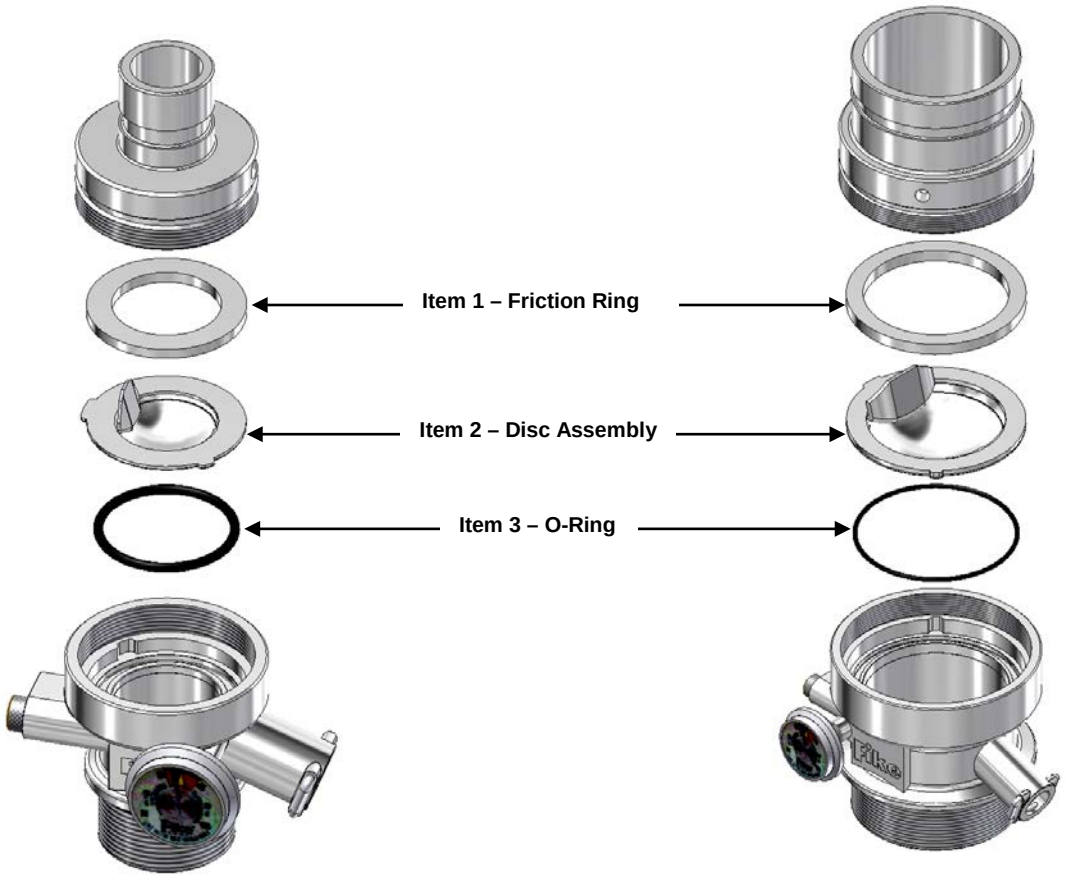

1" (25 mm) Impulse Valve **3" (80 mm) Impulse Valve**

IMPULSE VALVE COMPONENT SHEET

The 1” (25 mm) & 3” (80 mm) Impulse Valves are a rupture disc (metal diaphragm), pressure operated device that allows the agent to be released from the container and into the protected enclosure via the associated piping network and discharge nozzle(s).



Fike Impulse Valves are equipped with four ports:

- Agent Discharge Port allows agent release from container and also fulfills the pressure relief valve requirements in accordance with DOT regulations.
- Agent Fill Port used to fill (refill) and pressurize the container and also used for the Low Pressure Switch that will monitor internal container pressure.
- Actuator Port used to connect an Impulse Valve Operator (IVO) with Manual Strike Button for electric and manual actuation of the container or an Impulse Valve Pneumatic Operator (IVPO) for pneumatic operation.
- Pressure Gauge Port is used to connect a Pressure Gauge that will monitor internal container pressure, also equipped with an orifice plug that allows the pressure gauge to be removed safely when the container is pressurized.

COMPONENT	MATERIAL
Valve Body	Brass
Rupture Disc Assembly	Hastelloy C276/ 316SST
APPROVALS	U.L. Ex4623 / FM 3034180

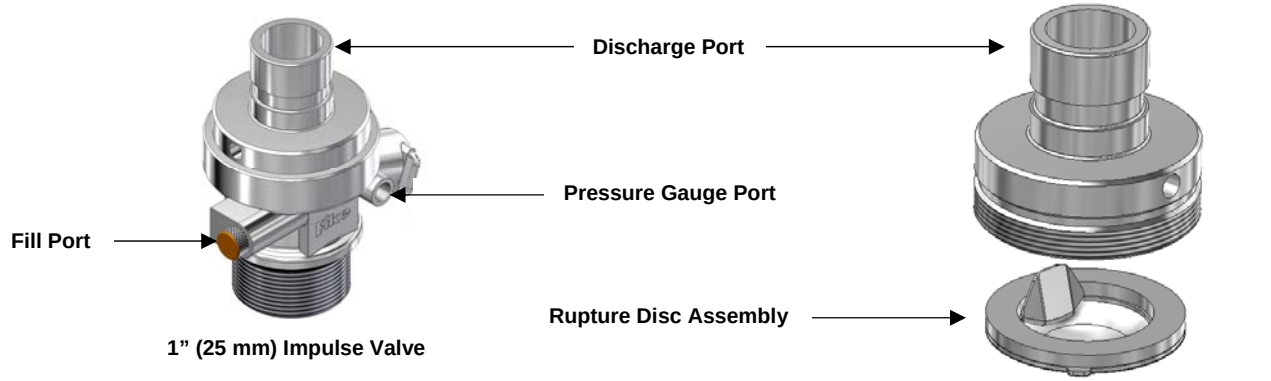

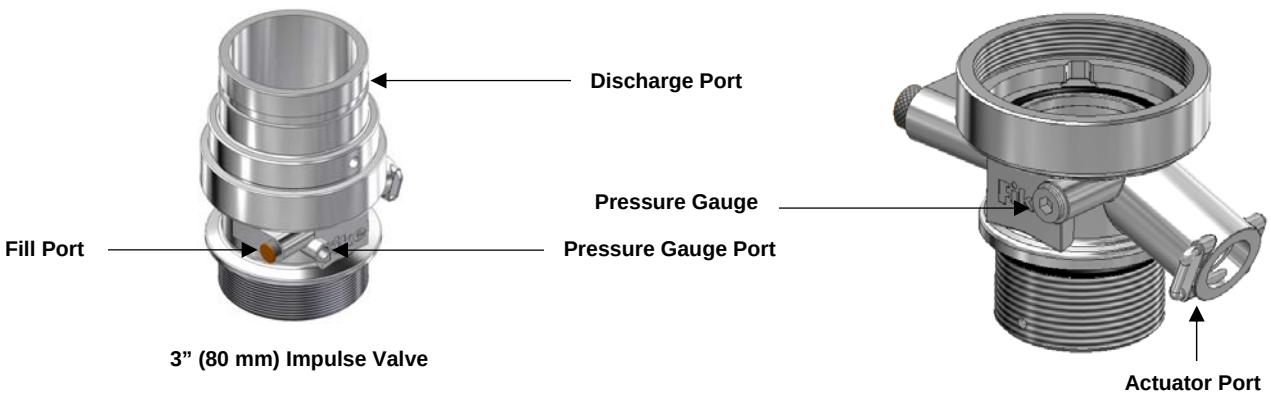

While every precaution has been taken during the preparation of this document to ensure the accuracy of its content, Fike assumes no responsibility for errors or omissions.
Fike reserves the right to make changes to the product or this document without notice.

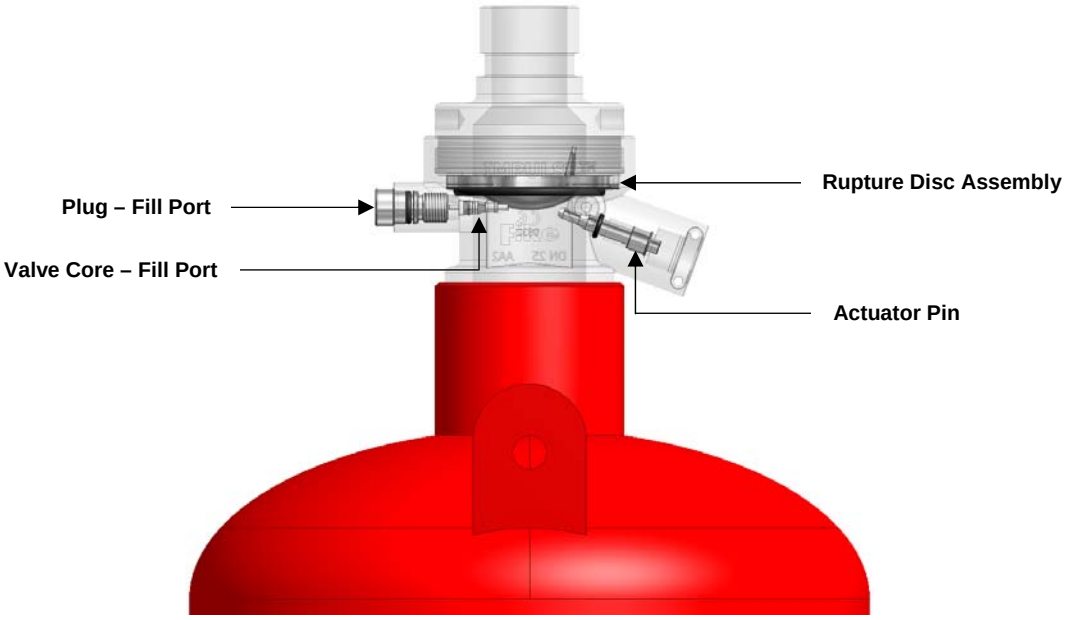

Internal View – 1” (25 mm) Impulse Valve

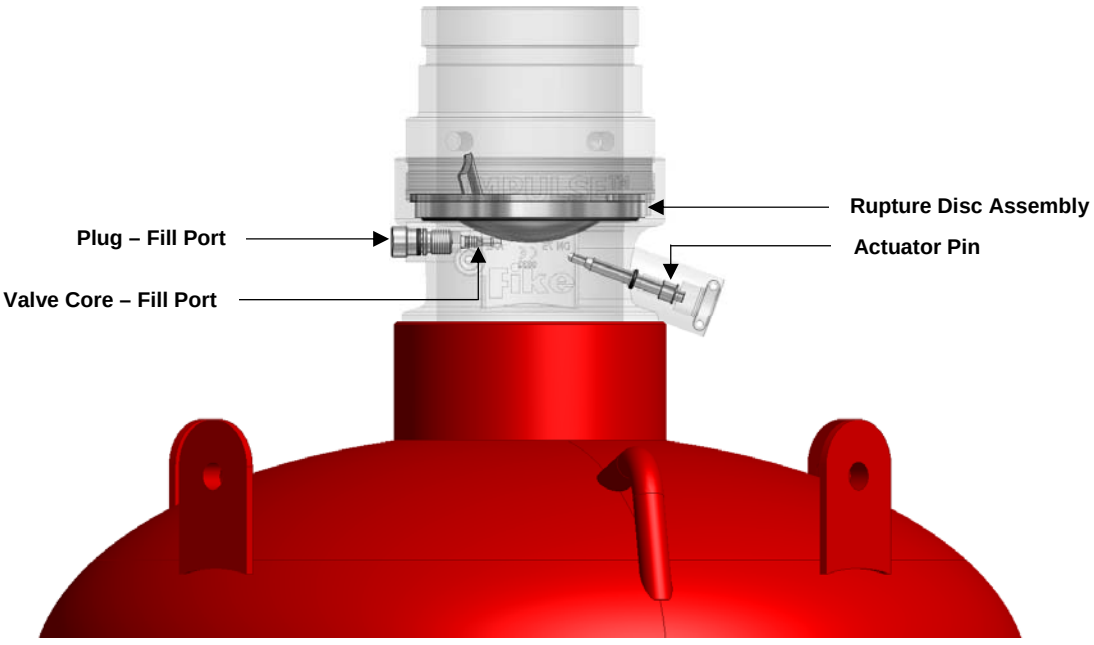

Internal View – 3” (80 mm) Impulse Valve

PRESSURE GAUGE – HFC-227EA COMPONENT SHEET

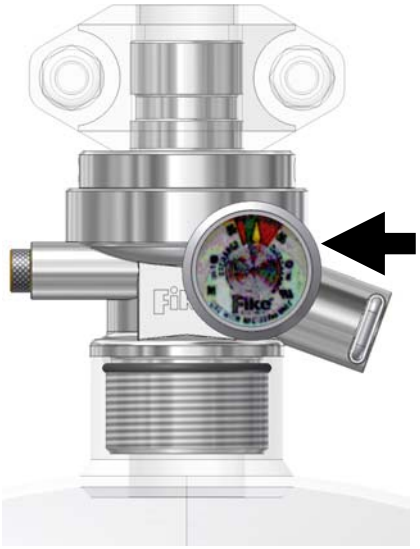

All Fike Clean Agent Fire Suppression containers with HFC-227ea agent are provided with a pressure gauge (p/n 02-3594) to indicate the internal container pressure.

The pressure gauge scale is calibrated to show the actual pressure and is color-coded to show operating range, under-pressure range, and over-pressure range.

This gauge can be removed/replaced on a charged container without removing the agent first. This port works by allowing a small controlled amount of leakage past its internal threads. This provides enough flow to operate the pressure gauge while being small enough to allow the gauge to be removed safety.

APPROVALS UL Ex4623 / FM 3034180

INSTALLATION

The pressure gauge is installed on the container at the factory before the container is filled / shipped.

The container pressure needs to be checked as a part of the installation procedure. They should read 24.8 bar at 21°C. For temperatures other than 21°C, reference Figure 1 – Temperature vs. Pressure Chart.

Figure 1 – Temperature vs. Pressure Chart (Metric Units)

Temperature (°C)	Pressure (bar)
0	19.9
4	20.9
10	22.1
16	23.4
21	24.8
27	26.2
32	27.7
38	29.3
43	31.0
49	32.8
54	34.6

While every precaution has been taken during the preparation of this document to ensure the accuracy of its content, Fike assumes no responsibility for errors or omissions.
Fike reserves the right to make changes to the product or this document without notice.

REPLACEMENT PROCEDURE

The following procedure is used to replace the pressure gauge on a charged container.

CAUTION: When replacing a pressure gauge, do not allow the pressure port to remain open (disconnected) for an extended period of time. A significant quantity of agent could be lost from the container.

Step	Procedure
1	Place Teflon tape on the male thread connection of the replacement pressure gauge(s). **DO NOT** overlap the end of the connection – the first thread should be uncovered.
2	Remove the old pressure gauge.
3	Install the new pressure gauge.
4	Check the assembly for leaks using a suitable leak test device.

NOTE: Refer to the Recharge Manual for recommendations and leak test procedures.



IMPULSE VALVE OPERATOR (IVO) KIT W/ IRM COMPONENT SHEET

DESCRIPTION

The Impulse Valve Operator (IVO) provides means to electrically or manually activate the Fike Impulse Valve clean agent container by providing the force required to extend a piston that will open the rupture disc, allowing the agent to be released from the container.

The IVO can be activated electrically via a signal from Fike control panel or manually by depressing red strike buttom.

Fike Clean Agent Containers with Impulse Valve **must** use an Impulse Releasing Module (IRM) to supervise the agent release circuit wiring (for open and ground fault conditions) from the container to the control panel. The Impulse Valve Operator Supervisor (IVOS) is used to monitor the presence of the Impulse Valve Operator (IVO). When installed between the Impulse Valve and the IVO, this supervises the position of the actuation device; when the IVO is removed from the container this will cause a "supervisory event" at the system control panel.

The IVOS can also be used to monitor the position of the Impulse Valve Pneumatic Operator (IVPO).

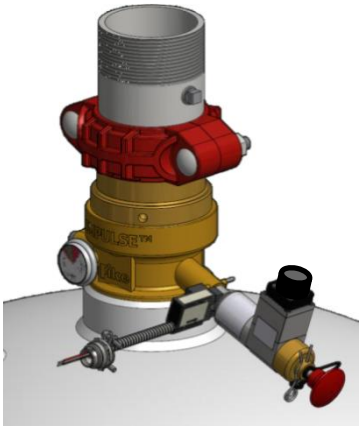

IMPULSE VALVE OPERATOR (IVO) KIT (p/n 70-279)		
Item No.	**Part Number**	**Description**
1	02-12728	Impulse Valve Operator (IVO)
2	10-2748	Impulse Releasing Module Assembly (IRM)
3	02-14263	Impulse Valve Operator Supervisor(IVOS)
4	02-13130	Cotter Pin
5	02-2213	Security Tie
6	02-12925	Plastic Cap (Black)
Temperature Range		32° F to 130° F (0° C to 54.4° C)
Listings & Approvals		UL / ULC Listed & FM Approved
SPECIFICATIONS – IMPULSE VALVE OPERATOR (IVO) (p/n 02-12728)		
Normal Supply Voltage		24 VDC
Current Consumption		0 Amps (for Battery Calculation)
Electrical Connection		½" NPT for conduit connection
IVO Material		Stainless Steel (Body) / Brass (End Cap)
SPECIFICATIONS – IMPULSE VALVE OPERATOR SUPERVISOR (IVOS)(p/n 02-14263)		
Switch		Normally Closed (Black) / Normally Open Contacts (White) / Common (Red)
Conduit		0.25"ID SST Flexible Conduit 33.5" lg. with 1/2" Knockout Connector
Wire Leads		22 AWG, 44" lg.

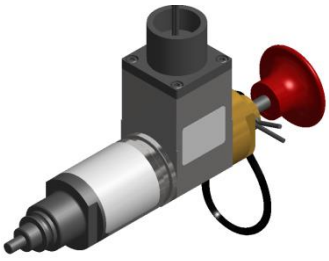

Item No. 1

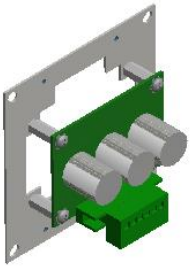

Item No. 2

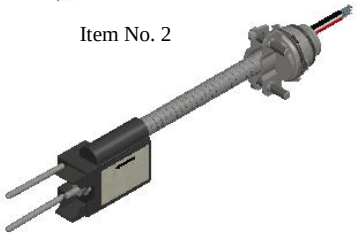

Item No. 3

While every precaution has been taken during the preparation of this document to ensure the accuracy of its content, Fike assumes no responsibility for errors or omissions.
Fike reserves the right to make changes to the product or this document without notice.

INSTALLATION

After the electrical / control system has been checked out and no trouble / ground faults are present; proceed with the Actuation System installation.

NOTE: This should be the last items completed before the system is placed into operation.

IMPORTANT NOTE: Check to ensure IVO is armed (Firing Pin retracted) and Safety Pin is place before installing to the Impulse Valve on the container.

Install the IVOS wire leads to the control unit. (Refer to IVOS wiring details on page 30)

Install the IVO wire leads to the control unit. (Refer to Control Panel manual for wiring details)

Install IVO; remove Retaining Clip and Plastic Plug from Impulse Valve Actuation Port.

Insert IVO into Impulse Valve Actuation Port and insert IVOS Retaining Clip.

The container is **"NOW ARMED"**.

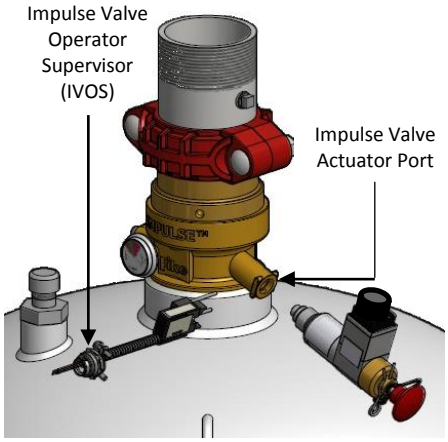

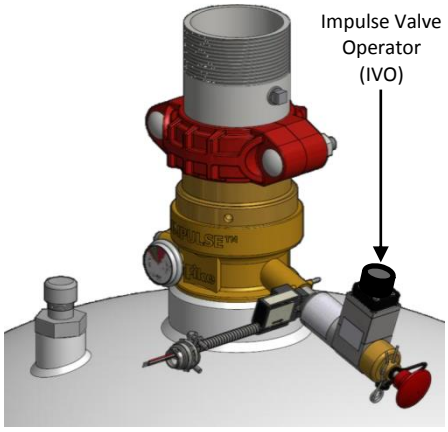

ELECTRIC ACTUATION – SINGLE CONTAINER SYSTEM W/ IVO

For wiring installation details between Fike Control Panel, IRM and the IVO, reference the Impulse Release Module Product Manual (p/n 06-552).

At this point the IVO can be installed to the Clean Agent Container Impulse Valve. The Discharge Pressure Switch (p/n 02-12534) is required and is wired to the manual release contact in SHP PRO or to a monitor module in Cheetah Xi or Xi50.

WARNING: Do not attempt to install the IVO with the firing pin in the extended position.

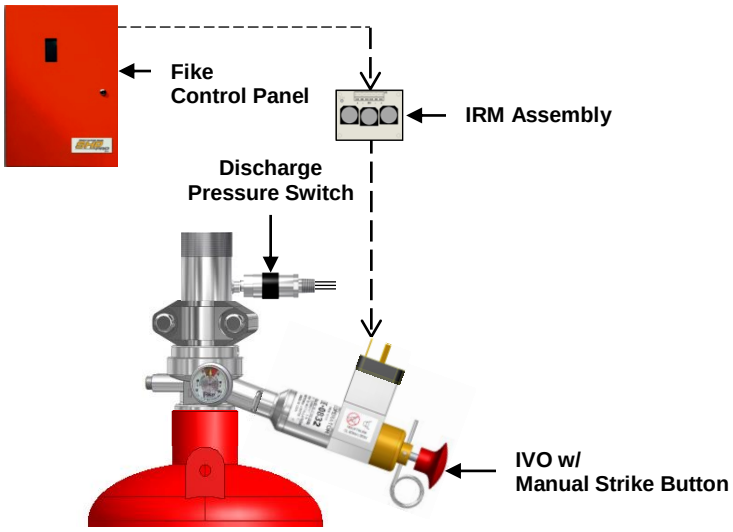

ELECTRIC ACTUATION – MULTI- CONTAINER SYSTEM W/ IVO

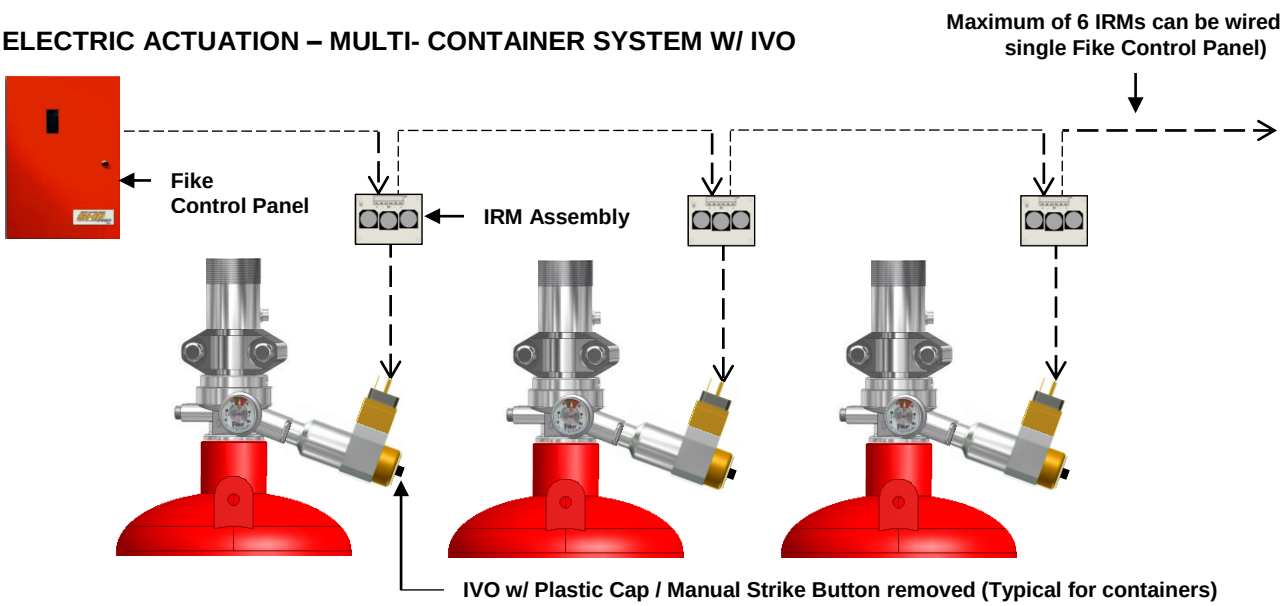

IMPORTANT NOTE: When utilizing electric actuation (IRM) with multiple containers with IVO, the manual strike button on each IVO must be removed and plastic cap installed. The Discharge Pressure Switch is **NOT** used. This is to prevent a single container from being discharged in a multiple container system.

For wiring installation details between Fike Control Panel, IRM and the IVO, reference the Impulse Release Module (IRM) Product Manual (p/n 06-552).

At this point the IVO can be installed to the Clean Agent Container Impulse Valve.

Reference detailed installation instructions on page 2 of this component sheet.

ELECTRIC & PNEUMATIC ACTUATION – TWO CONTAINER SYSTEM W/ IVO & IVPO

ITEM	PART NUMBER	DESCRIPTION
1	02-4530	¼" NPT x ¼" JIC Adaptor (must be ordered separately)
2	02-4977	¼" JIC x 3.0' lg. Actuation Hose (supplied w/ IVPO)(see note)
3	02-4535	1/8" NPT x ¼" JIC Adaptor (supplied w/ IVPO)
4	02-12926	¼" JIC Male Adaptor (must be ordered separately)

NOTE: This actuation method requires 2 – ¼" JIC x 3.0' lg. Actuation Hoses, 1 hose supplied w/ IVPO assembly, the 2nd Actuation Hose must be ordered separately.

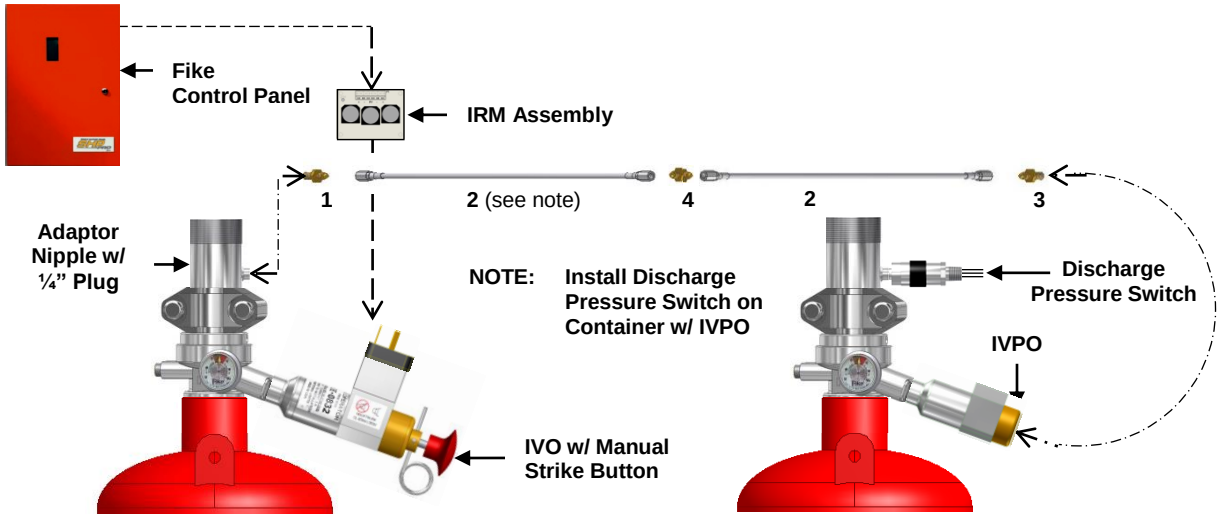

1st remove the ¼" NPT Plug from Adaptor Nipple, then install Actuation System as shown above. Secure Actuation tubing to a solid surface**.** Anchoring into plaster, sheetrock wall or any other facing material is NOT acceptable. For additional information regarding the installation and resetting of the IVPO, refer to the IVPO Component Sheet (p/n 06-551).

The Discharge Pressure Switch (p/n 02-12534) is required and is wired to the manual release contact in SHP PRO or to a monitor module in Cheetah Xi or Xi50.

ELECTRIC & PNEUMATIC ACTUATION – MULTI CONTAINER SYSTEM W/ IVO & IVPO

ITEM	PART NUMBER	DESCRIPTION
1	02-4530	¼" NPT x ¼" JIC Adaptor (must be ordered separately)
2	02-4977	¼" JIC x 3.0' lg. Actuation Hose (supplied w/ IVPO) (see note)
3	02-4535	1/8" NPT x ¼" JIC Adaptor (supplied w/ IVPO)
4	C02-1359	¼" Tube Tee (must be ordered separately)
5	C02-1356	¼" Male JIC x ¼" Male Tube Adaptor (must be ordered separately)
6	02-12695	¼" Tube x ¼" JIC Adaptor (must be ordered separately)
7	02-12696	¼" Tube Elbow-90° (must be ordered separately)
8	02-12697	¼" Tube Coupler (not shown) (must be ordered separately)

NOTE: The Actuation Hose required to connect the 1st container w/ IVO to the Actuation Tubing must be ordered separately.

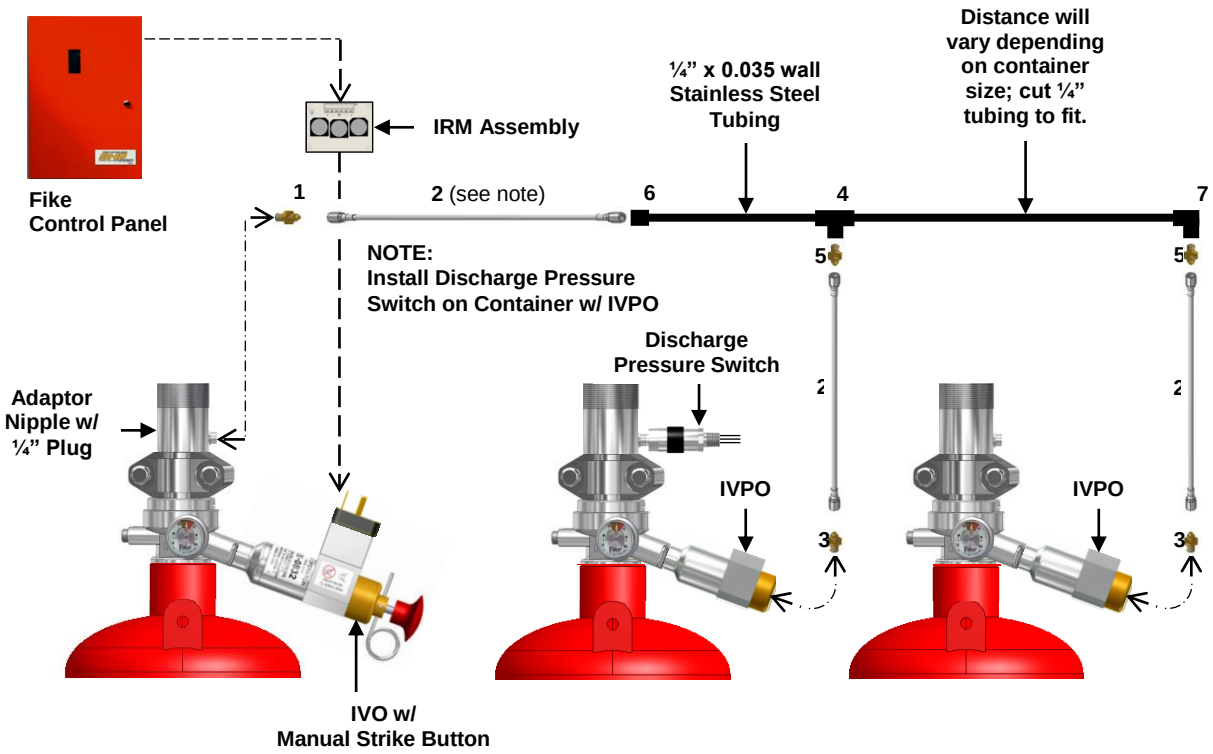

The illustration above shows the items required to make the proper connection between the Container equipped w/ an IVO and the Container(s) equipped w/ an IVPO. The maximum length of pneumatic actuation line (including Hoses) can not exceed 50 ft. (15.2 m) and up to 6 containers equipped w/ an IVPO.

1st remove the ¼" NPT Plug from Adaptor Nipple, then install Actuation System as shown above. Secure Actuation tubing to a solid surface**.** Anchoring into plaster, sheetrock wall or any other facing material is NOT acceptable.

The Discharge Pressure Switch (p/n 02-12534) is required and is wired to the manual release contact in SHP PRO or to a monitor module in Cheetah Xi or Xi50.

For additional information regarding the installation and resetting of the IVPO, refer to the IVPO Component Sheet (p/n06-540-1-3).

RESET INSTRUCTIONS

Remove IVO from Impulse Valve by removing Retaining Clip.

Remove Cotter Pin and pull the Manual Strike Button knob until it resets (clicks into place)

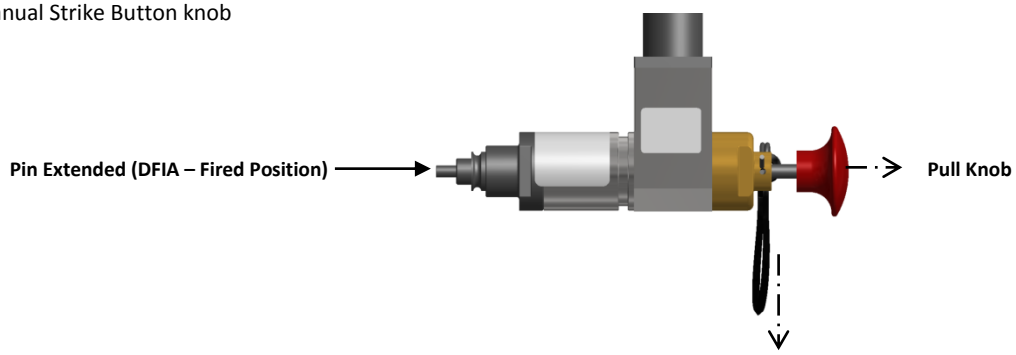

Insert IVO into Reset Tool and secure with Retaining Clip

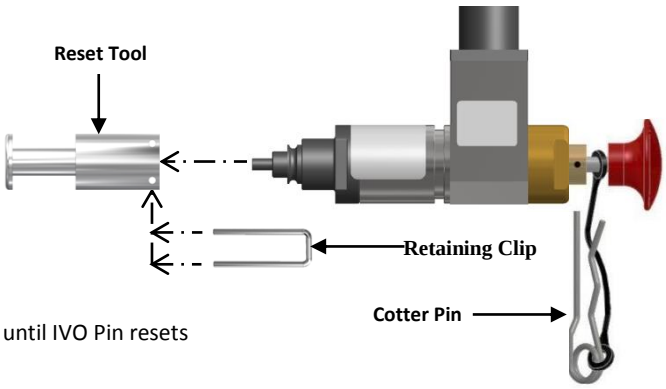

Push Reset Tool button (firmly) against a hard surface until IVO Pin resets (clicks into place)

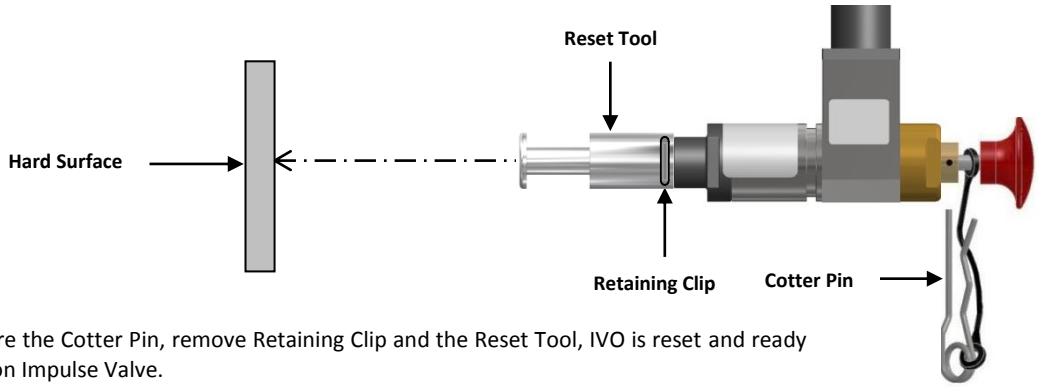

Insert and secure the Cotter Pin, remove Retaining Clip and the Reset Tool, IVO is reset and ready to be installed on Impulse Valve.

IMPORTANT NOTE: Check IVO to ensure device is armed before inserting on Impulse Valve.

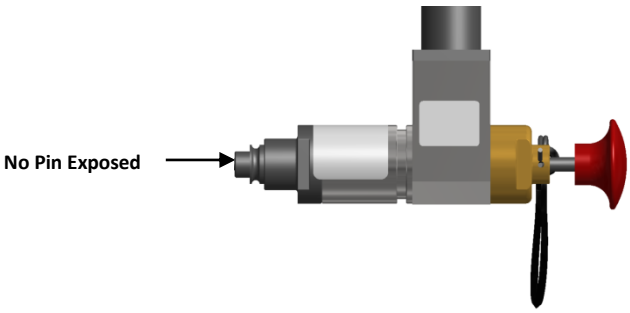

DIRECT FIRED IMPULSE ACTUATOR (DFIA) KIT

An ISO 9001:2008 Company

DESCRIPTION

The Direct Fired Impulse Actuator (DFIA) provides means to electrically or manually activate the Fike Clean Agent Containers with the Impulse Valve by providing the force required to extend a piston that will open the rupture disc, allowing the agent to be released from the container.

The DFIA can be activated electrically via a signal from a Fike control panel or manually by depressing red strike button.

Fike Clean Agent Containers with Impulse Valve / DFIA can be connected directly to the solenoid circuit of SHP Pro & the solenoid output of the RCM on the Cheetah Xi & Cheetah Xi50 (without the use of a IRM), this wiring will be supervised (for open and ground fault conditions) from the container to the control panel.

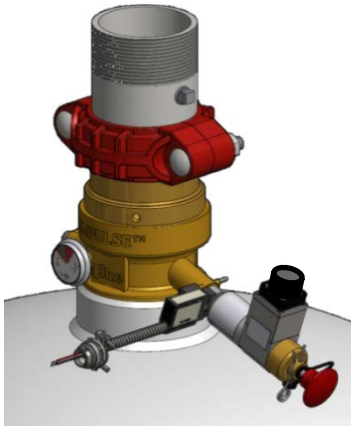

SPECIFICATIONS

P/N 70-311		DIRECT FIRED IMPULSE ACTUATOR (DFIA) KIT
NOTE: The following items are furnished with the DFIA Kit:		
Item No.	**Part Number**	**Description**
1	02-13279	Direct Fired Impulse Actuator (DFIA)
2	02-14263	Impulse Valve Operator Supervisor (IVOS)
3	02-13130	Cotter Pin
4	02-2213	Security Tie
Normal Supply Voltage		24 VDC
Current Consumption (for Battery Calculation)		Alarm max. 912 mA / Supervision max. 33.4 mA – SHP Pro Alarm max. 930 mA / Supervision max. 25.4 mA – Cheetah Xi & Xi50
Electrical Connection		½" NPT for conduit connection
DFIA Material		Stainless Steel (Body) / Brass (End Cap)
Temperature Range		32° F to 130° F (0° C to 54.4° C) w/ HFC-227ea System 32° F to 120° F (0° C to 49° C) w/ ECARO-25 System
LISTINGS & APPROVALS		UL / ULC Listed / FM Approved

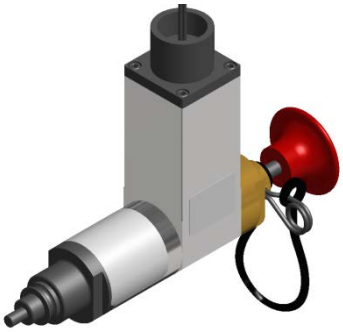

Item No. 1



Item No. 2

Fike®, 704 SW 10th Street, P.O. Box 610, Blue Springs, Missouri 64013-0610 U.S.A. ● Tel: (816) 229-3405 ● www.fike.com
While every precaution has been taken during the preparation of this document to ensure the accuracy of its content, Fike assumes no responsibility for errors or omissions. Fike reserves the right to make changes to the product or this document without notice

INSTALLATION

After the electrical / control system has been checked out and no trouble / ground faults are present; proceed with the Actuation System installation.

NOTE: This should be the last items completed before the system is placed into operation.

IMPORTANT NOTE: Check to ensure DFIA is armed (Firing Pin retracted) and Safety Pin is place before installing to the Impulse Valve on the container.

Install the IVOS wire leads to the control unit. (Refer to IVOS wiring details on page 32)

Install the DFIA wire leads to the control unit (Refer to Control Panel manual for wiring details)

Install DFIA; remove Retaining Clip and Plastic Plug from Impulse Valve Actuation Port.

Insert DFIA into Impulse Valve Actuation Port and insert IVOS Retaining Clip.

The container is **"NOW ARMED"**.

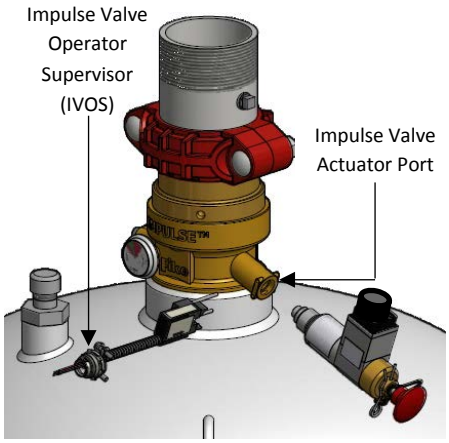

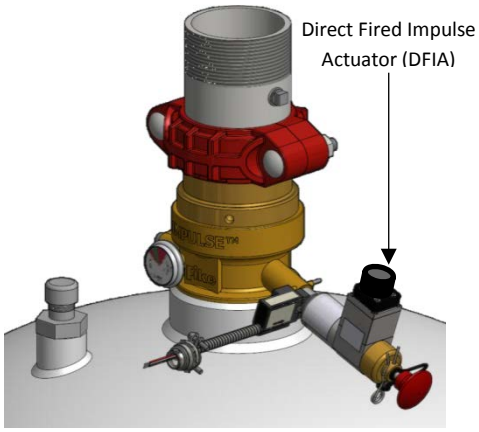

Fike®, 704 SW 10th Street, P.O. Box 610, Blue Springs, Missouri 64013-0610 U.S.A. ● Tel: (816) 229-3405 ● www.fike.com
While every precaution has been taken during the preparation of this document to ensure the accuracy of its content, Fike assumes no responsibility for errors or omissions. Fike reserves the right to make changes to the product or this document without notice

ELECTRIC ACTUATION – SINGLE CONTAINER SYSTEM W/ DFIA

For wiring installation details between Control Panel, and the DFIA, reference page 5.

At this point the DFIA can be installed to the Clean Agent Container Impulse Valve. The Discharge Pressure Switch (p/n 02-12534) is required and is wired to the manual release contact in SHP PRO or to a monitor module in Cheetah Xi or Xi50 installations.

WARNING: Do not attempt to install the DFIA with the firing pin in the activated (extended) position.

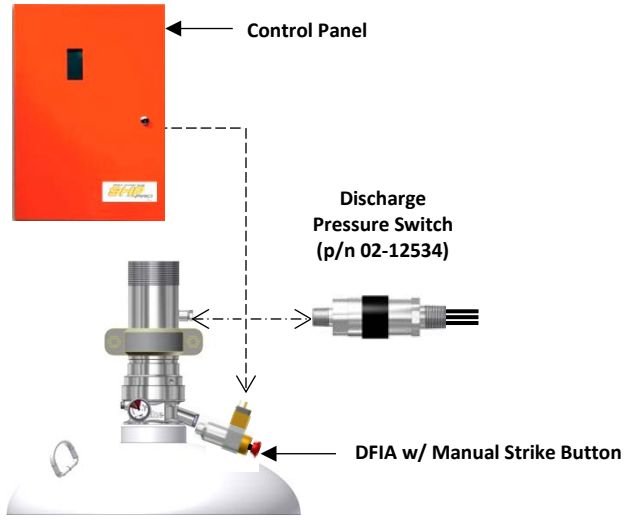

ELECTRIC & PNEUMATIC ACTUATION – TWO CONTAINER SYSTEM W/ DFIA & IVPO

ITEM	PART NUMBER	DESCRIPTION
1	02-4530	¼" NPT x ¼" JIC Adaptor (must be ordered separately)
2	02-4977	¼" JIC x 3.0' lg. Actuation Hose (supplied w/ IVPO) (see note)
3	02-4535	1/8" NPT x ¼" JIC Adaptor (supplied w/ IVPO)
4	02-12926	¼" JIC Male Adaptor (must be ordered separately)

NOTE: This actuation method requires 2 – ¼" JIC x 3.0' lg. Actuation Hoses, 1 hose supplied w/ IVPO assembly, the 2nd Actuation Hose must be ordered separately.

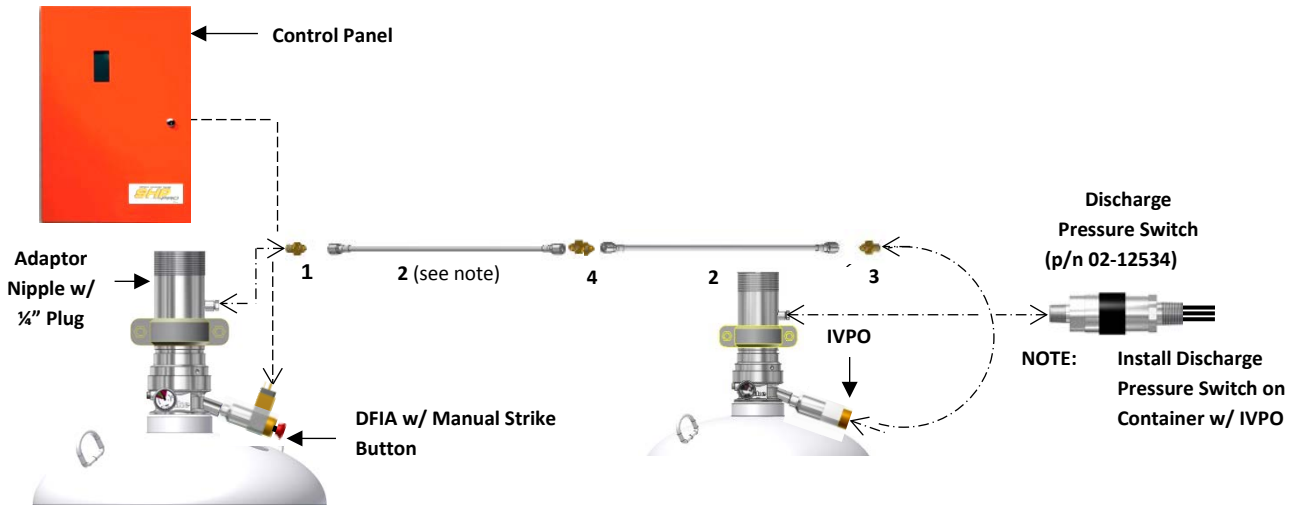

Fike®, 704 SW 10th Street, P.O. Box 610, Blue Springs, Missouri 64013-0610 U.S.A. ● Tel: (816) 229-3405 ● www.fike.com
While every precaution has been taken during the preparation of this document to ensure the accuracy of its content, Fike assumes no responsibility for errors or omissions. Fike reserves the right to make changes to the product or this document without notice

1st remove the ¼" NPT Plug from Adaptor Nipple, then install Actuation System as shown above. Secure Actuation tubing to a solid surface. Anchoring into plaster, sheetrock wall or any other facing material is NOT acceptable. For additional information regarding the installation and resetting of the IVPO, refer to the IVPO Component Spec (p/n 06-432-1-6-DF).

The Discharge Pressure Switch (p/n 02-12534) is required and is wired to the manual release contact in the SHP Pro or to a monitor module in the Cheetah Xi or Xi50 installations.

ELECTRIC & PNEUMATIC ACTUATION – MULTI CONTAINER SYSTEM W/ DFIA & IVPO

ITEM	PART NUMBER	DESCRIPTION
1	02-4530	¼" NPT x ¼" JIC Adaptor (must be ordered separately)
2	02-4977	¼" JIC x 3.0' lg. Actuation Hose (supplied w/ IVPO) (see note)
3	02-4535	1/8" NPT x ¼" JIC Adaptor (supplied w/ IVPO)
4	C02-1359	¼" Tube Tee (must be ordered separately)
5	C02-1356	¼" Male JIC x ¼" Male Tube Adaptor (must be ordered separately)
6	02-12695	¼" Tube x ¼" JIC Adaptor (must be ordered separately)
7	02-12696	¼" Tube Elbow-90° (must be ordered separately)
8	02-12697	¼" Tube Coupler (not shown) (must be ordered separately)

NOTE: The Actuation Hose required to connect the 1st container w/ IVO to the Actuation Tubing must be ordered separately.

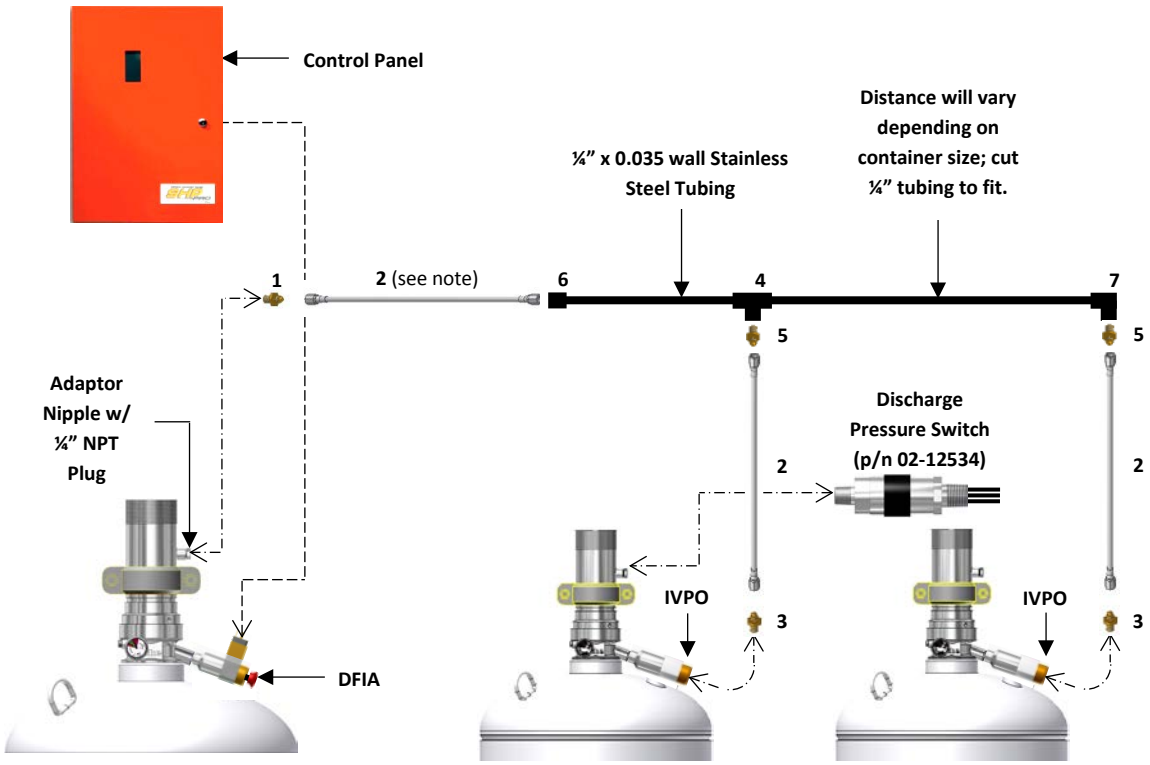

The illustration above shows the items required to make the proper connection between the Container equipped w/ an DFIA and the Container(s) equipped w/ an IVPO. The maximum length of pneumatic actuation line (including Hoses) can not exceed 50 ft. (15.2 m) and up to 6 containers equipped w/ an IVPO.

1st remove the ¼" NPT Plug from Adaptor Nipple, then install Actuation System as shown above. Secure Actuation tubing to a solid surface**.** Anchoring into plaster, sheetrock wall or any other facing material is NOT acceptable.

Fike®, 704 SW 10th Street, P.O. Box 610, Blue Springs, Missouri 64013-0610 U.S.A. ● Tel: (816) 229-3405 ● www.fike.com
While every precaution has been taken during the preparation of this document to ensure the accuracy of its content, Fike assumes no responsibility for errors or omissions. Fike reserves the right to make changes to the product or this document without notice

The Discharge Pressure Switch (p/n 02-12534) is required and is wired to the manual release contact in the SHP Pro or to a monitor module in the Cheetah Xi or Xi50 installations.

For additional information regarding the installation and resetting of the IVPO, refer to the IVPO Component Spec (p/n06-432-1-6DF).

DFIA WIRING

The DFIA coil is not polarity sensitive and can be wired to a compatible control panel releasing circuit. Final termination is through the DIN connector supplied with the unit. Refer to the manual & wiring requirements for the specific control panel being used to ensure proper operation.

TYPICAL WIRING DETAIL FOR SHP PRO TO DFIA

For additional details refer to the SHP Pro manual (p/n 06-297)

NOTE 1: Maximum 1 DFIA per SHP Pro Controller

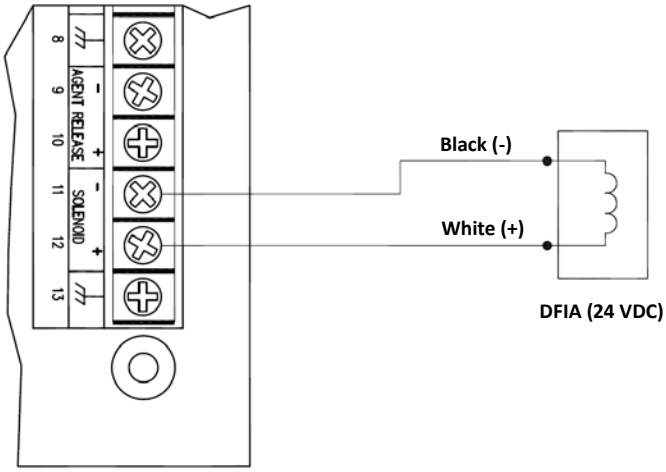

SHP Pro Controller

TYPICAL WIRING DETAIL FOR RCM MODULE TO DFIA

For additional details refer to the following product manuals:

- Cheetah Xi50 manual (p/n 06-369)
- Cheetah Xi manual (p/n 06-356)

NOTE 2: Maximum 1 DFIA per Releasing Module

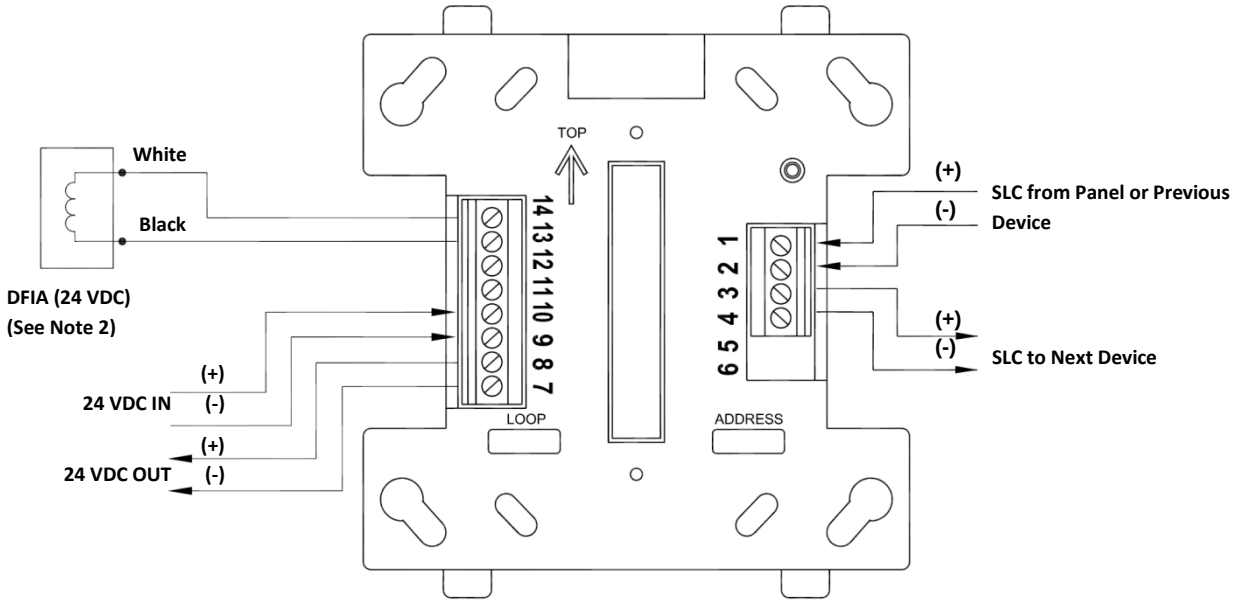

Releasing Module
(P/N: 55-052 / 55-053)

Fike®, 704 SW 10th Street, P.O. Box 610, Blue Springs, Missouri 64013-0610 U.S.A. ● Tel: (816) 229-3405 ● www.fike.com
While every precaution has been taken during the preparation of this document to ensure the accuracy of its content, Fike assumes no responsibility for errors or omissions. Fike reserves the right to make changes to the product or this document without notice

RESET INSTRUCTIONS

Remove DFIA from Impulse Valve by removing Retaining Clip.

Remove Cotter Pin and pull the Manual Strike Button knob until it resets (clicks into place)

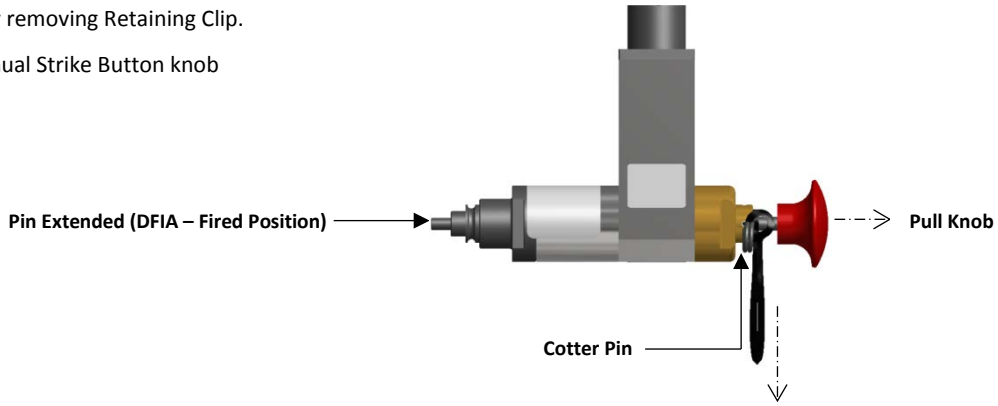

Insert DFIA into Reset Tool and secure with Retaining Clip

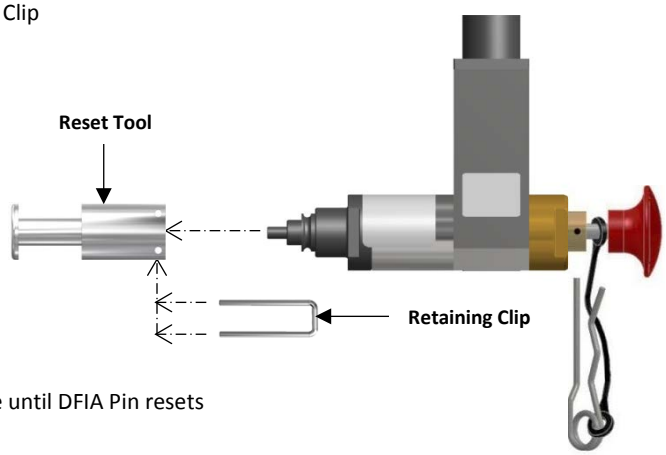

Push Reset Tool button (firmly) against a hard surface until DFIA Pin resets (clicks into place)

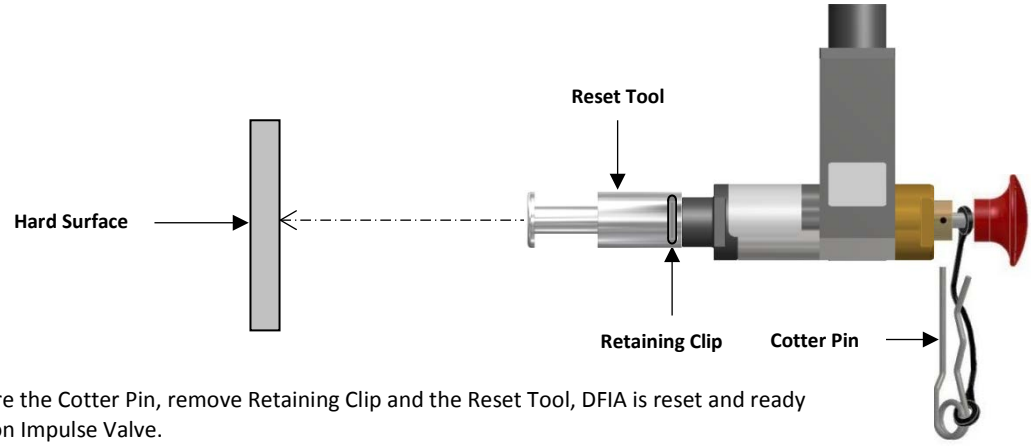

Insert and secure the Cotter Pin, remove Retaining Clip and the Reset Tool, DFIA is reset and ready to be installed on Impulse Valve.

IMPORTANT NOTE: Check DFIA to ensure device is armed before inserting on Impulse Valve.

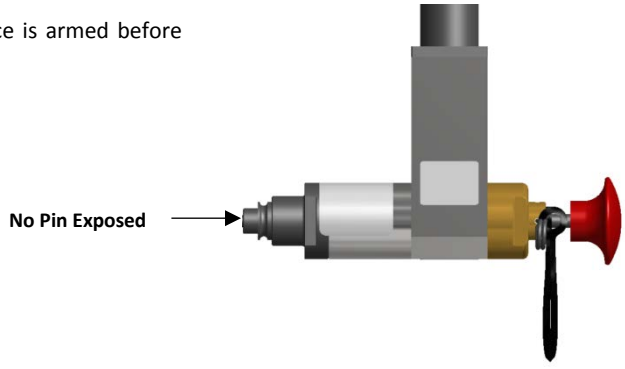

Fike®, 704 SW 10th Street, P.O. Box 610, Blue Springs, Missouri 64013-0610 U.S.A. ● Tel: (816) 229-3405 ● www.fike.com
While every precaution has been taken during the preparation of this document to ensure the accuracy of its content, Fike assumes no responsibility for errors or omissions. Fike reserves the right to make changes to the product or this document without notice

IMPULSE VALVE OPERATOR SUPERVISOR

DESCRIPTION

The Impulse Valve Operator Supervisor (IVOS) is used to monitor the presence of the Impulse Valve Operator (IVO). When installed between the Impulse Valve on the container and the IVO, this supervises the position of the actuation device; when the IVO is removed from the container this will cause a "trouble" at the system control panel.

This can also be used to monitor the position of the Impulse Valve Pneumatic Operator (IVPO).



SPECIFCATIONS – IMPULSE VAVLE OPERATOR SUPERVISOR (IVOS)	
Item	**Description**
Part Number	02-14263
Switch	Normally Closed (Black) / Normally Open Contacts (White) / Common (Red)
Conduit	0.25"ID SST Flexible Conduit 33.5" lg. with 1/2" Knockout Connector
Wire Leads	22 AWG, 44" lg.
Temperature Range	32°F to 130°F (0°C to 54.4°C)
Listings & Approvals	UL / ULC Listed & FM Approved

INSTALLATION

After the electrical / control system has been checked out and no trouble / ground faults are present; proceed with the Actuation System installation.

NOTE: This should be the last items completed before the system is placed into operation.

IMPORTANT NOTES: Check to ensure IVO is armed (Firing Pin retracted) and Safety Pin is place before installing to the Impulse Valve on the container.

Install the wire leads from the IVOS to the control unit. (Refer to typical wiring diagrams for details)

Install IVO; remove Retaining Clip and Plastic Plug from Impulse Valve Actuation Port.

Insert IVO into Impulse Valve Actuation Port and insert IVOS Retaining Clip.

The container is **"NOW ARMED"**.

Fike®, 704 SW 10th Street, P.O. Box 610, Blue Springs, Missouri 64013-0610 U.S.A. ● Tel: (816) 229-3405 ● www.fike.com
While every precaution has been taken during the preparation of this document to ensure the accuracy of its content, Fike assumes no responsibility for errors or omissions. Fike reserves the right to make changes to the product or this document without notice

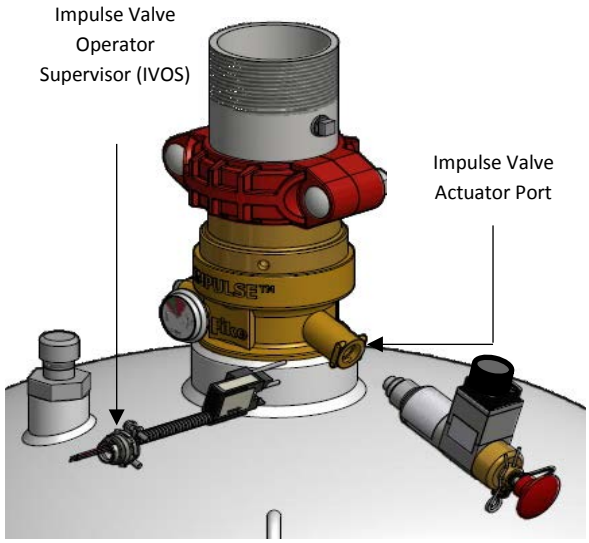

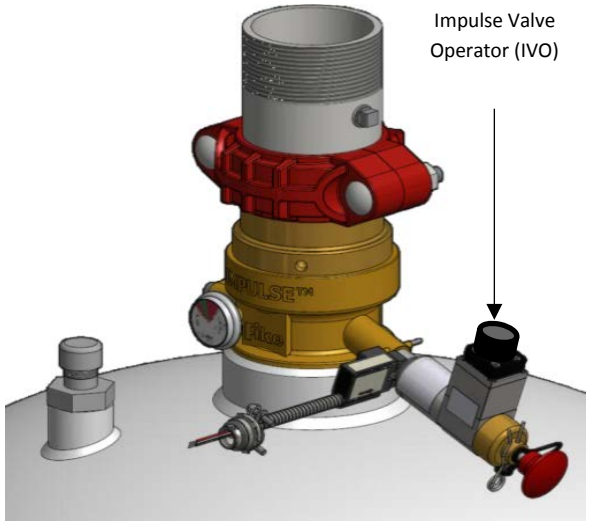

Fike®, 704 SW 10th Street, P.O. Box 610, Blue Springs, Missouri 64013-0610 U.S.A. ● Tel: (816) 229-3405 ● www.fike.com
While every precaution has been taken during the preparation of this document to ensure the accuracy of its content, Fike assumes no responsibility for errors or omissions. Fike reserves the right to make changes to the product or this document without notice

TYPICAL WIRING DETAIL FOR SHP PRO TO IVOS

(See SHP Pro Control Unit manual for specific wiring requirements)

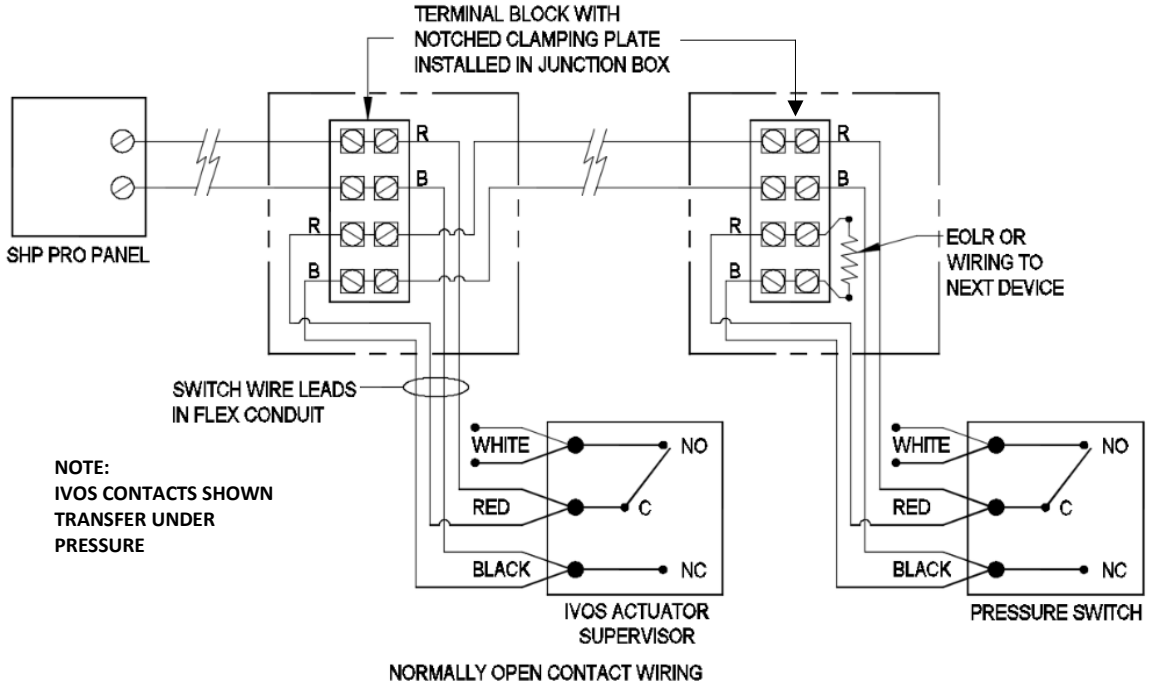

TYPICAL WIRING DETAIL FOR MONITOR MODULE TO IVOS

(See Cheetah Xi Control Unit manual for specific wiring requirements)

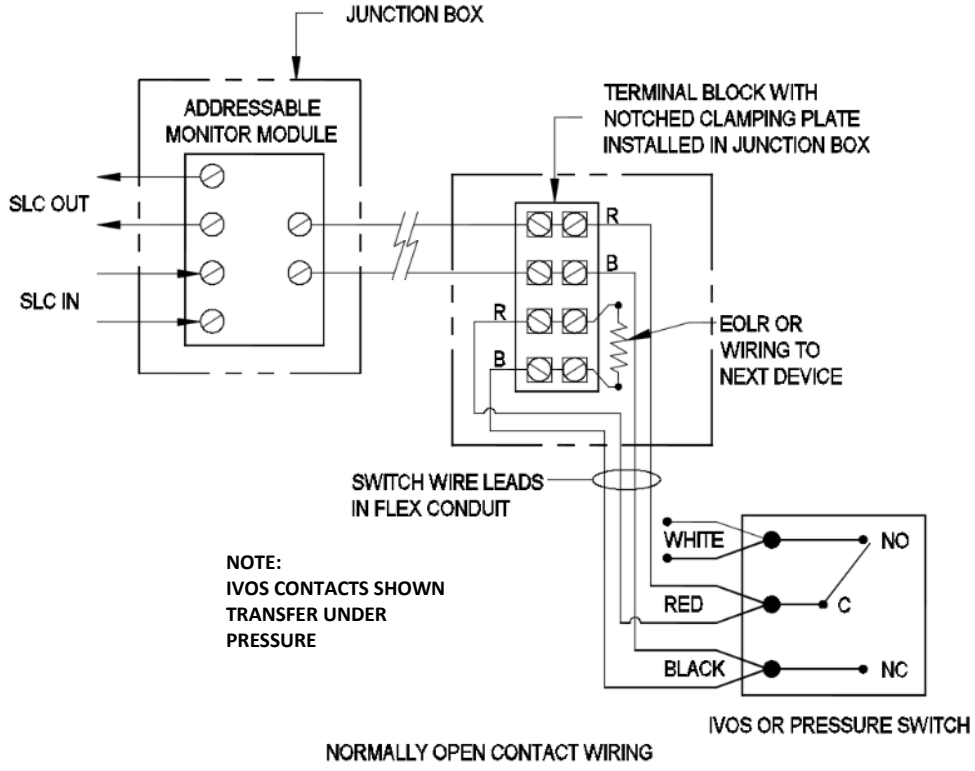

Fike®, 704 SW 10th Street, P.O. Box 610, Blue Springs, Missouri 64013-0610 U.S.A. ● Tel: (816) 229-3405 ● www.fike.com

While every precaution has been taken during the preparation of this document to ensure the accuracy of its content, Fike assumes no responsibility for errors or omissions. Fike reserves the right to make changes to the product or this document without notice

IMPULSE VALVE PNEUMATIC OPERATOR (IVPO) KIT COMPONENT SHEET

The Impulse Valve Pneumatic Operator (IVPO) provides the means to pneumatically activate the Fike Impulse Valve clean agent container by providing the force required to extend a piston that will open the rupture disc, allowing the agent to be released from the container.

The IVPO is installed in systems utilizing multiple clean agent containers.

Fike Clean Agent Containers with IVPO are operated by pneumatic pressure from Container with Impulse Valve Operator (IVO). For detailed information, refer to the Impulse Valve Operator Component Sheet (p/n 06-540-1-2 or 06-540-1-10)



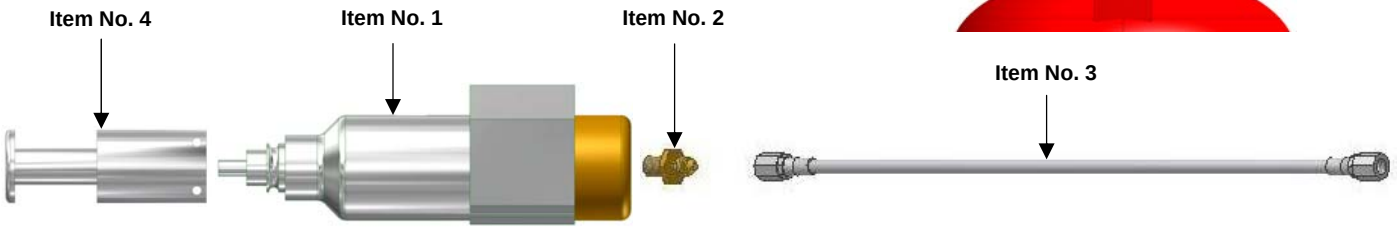

SPECIFICATIONS – IMPULSE VALVE PNEUMATIC OPERATOR (IVPO) KIT		
Item No.	**Part Number**	**Description**
1	02-12729	Impulse Valve Pneumatic Operator (IVPO)
2	02-4543	1/8" x ¼" JIC Adaptor
3	02-4977	¼" JIC x 1 m lg. Actuation Hose
4	70-286	Reset Tool
IVPO Material		Stainless Steel (Body) / Brass (End Cap)
Pneumatic Connection		1/8" NPT
Operating Pressure		7 bar (minimum) / 25 bar (nominal) / 35 bar (maximum)
Triggering Pressure Duration		2 seconds (minimum)
Temperature Range		-20°C to +50°C
APPROVALS		LPCB

INSTALLATION

After the electrical / control system has been checked out and not trouble / ground faults are present; proceed with the IVO and IVPO installation.

NOTE: The IVO should be the last items completed before the system is placed into operation.

- Remove the Retaining Clip p/n (02-11986) (Item 1) from the actuation port of the Impulse Valve. (see Figure 1)
- Remove the Plastic Plug from the actuation port of the Impulse Valve. Retain the plug for future use when the container has to be re-filled/serviced.
- Insert the IVPO (Item 2) into the actuation port of the Impulse Valve and secure by inserting the Retaining Clip (Item 1) provided. (see Figure 1)

While every precaution has been taken during the preparation of this document to ensure the accuracy of its content, Fike assumes no responsibility for errors or omissions.
Fike reserves the right to make changes to the product or this document without notice.

IMPORTANT NOTE: Check IVPO to ensure device is armed before inserting on Impulse Valve.

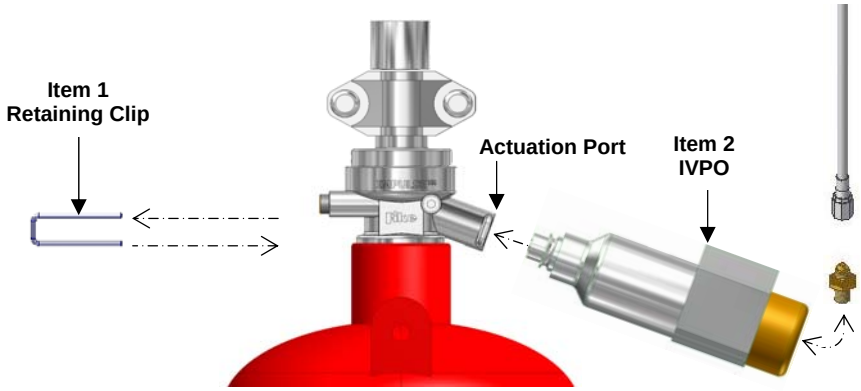

FIGURE 1

RESET INSTRUCTIONS

Remove IVPO from Impulse Valve by removing Retaining Clip.



IVPO – Fired Position

Insert IVPO into Reset Tool and secure with Retaining Clip

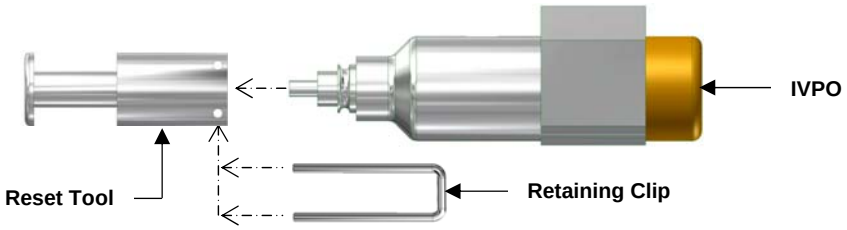

Push Reset Tool button (firmly) against a hard surface until IVPO Pin resets (clicks into place)

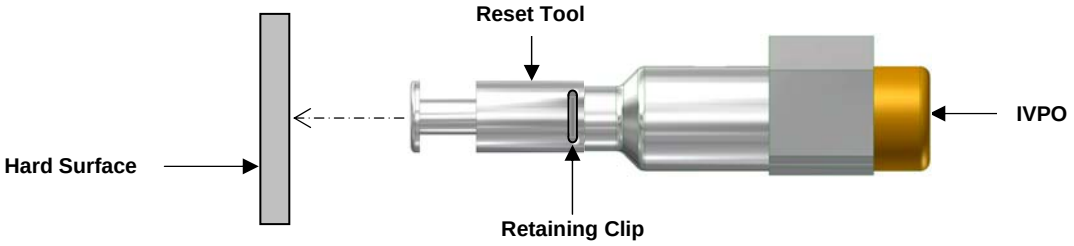

Remove Retaining Clip, IVPO is reset and ready to be installed on Impulse Valve.

IMPORTANT NOTE: Check IVPO to ensure device is armed before inserting on Impulse Valve.



IVPO – Armed Position

LOW PRESSURE SWITCH COMPONENT SHEET

Fike offers an optional Low Pressure Switch (LPS) for the purpose of continuously monitoring the container pressure for a low-pressure condition.

If the pressure inside the container drops below 20 bar, the switch contacts will transfer and invoke a “supervisory” indication on the control panel.

The LPS is an optional item and must be ordered separately. This device is installed in the fill port on the container with an Impulse Valve.

The LPS can be installed when the container is charged without the concern of agent / pressure loss.

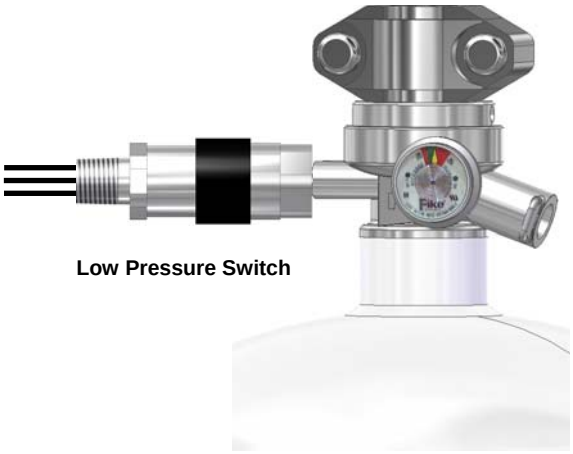

Low Pressure Switch

Container w/ Impulse Valve

SPECIFICATIONS – LOW PRESSURE SWITCH	
Part Number	02-12533
Temperature Limits	0 to 54.4°C
Enclosure Classification	NEMA 4
Contact Rating	Single pole, double throw; 5 amps resistive, 3 amps inductive @ 30VDC (can be wired for normally open or normally closed operation)
Body Material	Aluminum with irridite finish
Weight	0.2 kg
Pressure Connection	M10 x 1-6G
Electrical Connection	15 mm
LPS Length (approximate)	121 mm Long (including both connectors)
Wire Leads	(3) 18 gauge x 1.2m long Violet (Common), Blue (N.O.), Black (N.C.)
Pressure Setting	20 bar (decreasing)
APPROVALS	UL Ex4623 / FM 3034180

While every precaution has been taken during the preparation of this document to ensure the accuracy of its content, Fike assumes no responsibility for errors or omissions.
Fike reserves the right to make changes to the product or this document without notice.

INSTALLATION

The LPS is an optional item and must be ordered separately. This device can be installed in the Fill Port on a container that is charged by using the following steps:

Step 1: Prior to Assembly; lubricate the LPS O-Ring with Molycoat 55 or equal. Use care not to get lubricant into pressure port.

NOTES: **DO NOT** apply Teflon Tape to LPS threads.
DO NOT cross thread the LPS during installation.

Step 2: Remove and retain Plug from Fill Port. (See Figure 1)

Step 3: Remove rubber cap and screw in the LPS (Hand Tight) until the switch bottoms out. Screwing the switch in to this point will open an internal check valve and applies pressure the switch.

NOTE: **"NO TOOLS"** are required to install LPS.

Step 4: Leak check around the pressure gauge port using Snoop leak test fluid or equivalent.

If a leak is detected; remove the LPS from the fill port and remove the lubricant and contaminants from the O-Ring, threads and valve port using isopropyl alcohol and a soft clean cloth. Lubricate the O-Ring with Molycoat 55 or equal and reinstall. Leak test around the fill port.

If a leak is detected; remove the LPS from the fill port, remove the O-Ring, install a new O-Ring, lubricate the O-ring with Molycoat 55 or equal, install the LPS in the fill port, and leak test around the fill port.

NOTE: When installing conduct connector to LPS secure "Hand Tight". Over tightening may cause damage to the LPS or to the Impulse valve fill port threads.

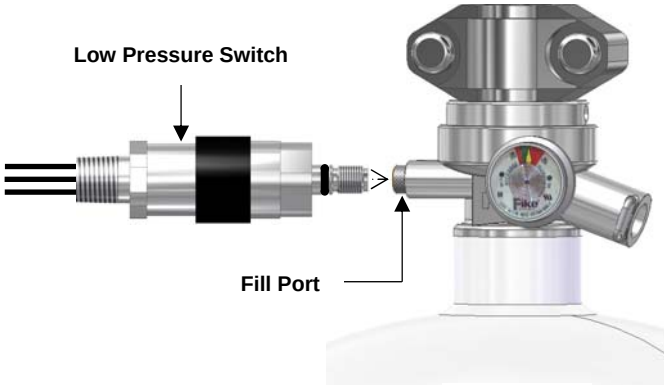

FIGURE 1

WIRING DIAGRAM – LOW PRESSURE SWITCH

The LPS should be wired into a supervised circuit in the control panel used to provide a supervisory signal if the container pressure drops below 1986 kPa. The switch is wired as a normally closed contact (open under pressure). (see Figure 2)

NOTE: Refer to the Installation, Operation & Maintenance for the control panel being used for specific wiring criteria.

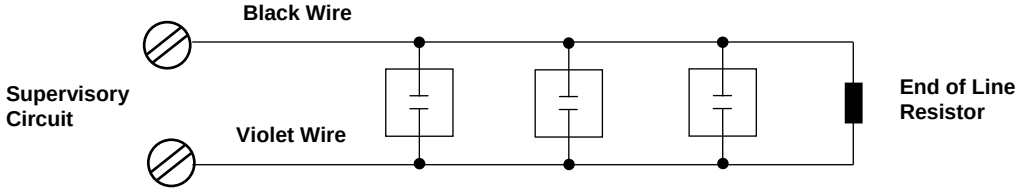

Low Pressure Switch
Normally Closed Contacts
(open under pressure)
(Typical 3)

FIGURE 2

MOUNTING STRAPS & BRACKETS COMPONENT SHEET

Mounting Straps / Brackets are used to secure containers to a wall or other suitable mounting surface. These devices are supplied with each container purchased in accordance with the information shown below.

Mounting hardware (nuts, bolts, etc.) is supplied by system installer.

CAUTION: Anchoring into plaster, sheetrock wall or any other facing material is **NOT** acceptable.

CONTAINER SIZE (L)	STRAP PART NUMBER	NO. OF STRAPS REQ'D	MOUNTING POSITION	DIMENSION (mm)		
				A	B	H_1
5	74-1013-109	1	Upright (Valve Up)	89	115	150
9	74-1013-109	1	Upright (Valve Up)	89	115	300
16	74-1013-106	1	Upright (Valve Up)	115	141	300
26	74-1013-106	1	Upright (Valve Up)	115	141	350
45	74-1013-101	1	Upright (Valve Up)	162	188	631
83	74-1013-101	1	Upright (Valve Up)	162	188	867
150	74-1013-102	1	Upright (Valve Up)	206	239	1137
NOTE		All dimensions are approximate				
MATERIAL		Carbon Steel				
BRACKET COLOR		White				

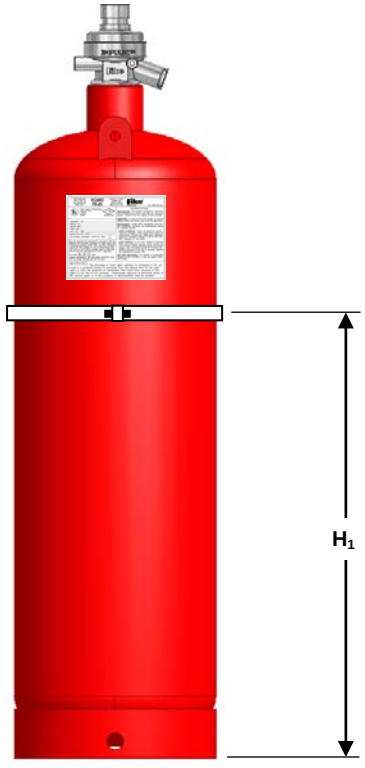

Front View – Container & Mounting Strap

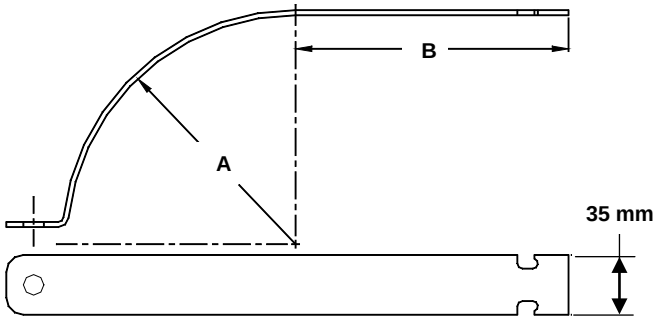

Top & Side View – Mounting Strap

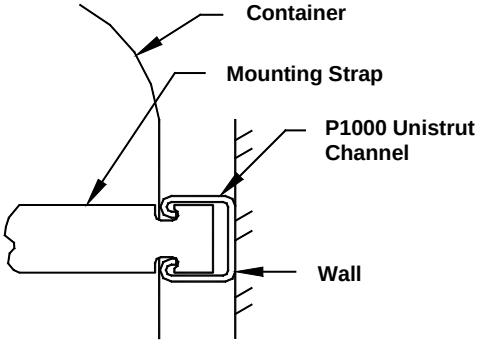

Mounting Strap Detail

While every precaution has been taken during the preparation of this document to ensure the accuracy of its content, Fike assumes no responsibility for errors or omissions.
Fike reserves the right to make changes to the product or this document without notice.

PIPE AND FITTINGS COMPONENT SHEET

Pipe and fittings used in Clean Agent System piping network must conform to the requirements as outlined in NFPA 2001 and ISO 14520, latest editions.



PIPING MATERIALS

Piping materials must conform to the requirements as outlined in NFPA 2001, latest edition. The thickness of the piping wall shall be calculated in accordance with ASME B31.1 Power Piping Code. For Fike Clean Agent System, w/ 24.8 bar working pressure, use a minimum piping design pressure of 34.4 bar at 21°C.

CAUTION: Cast iron pipe, steel pipe conforming to ASTM A120, or nonmetallic pipe **shall not** be used.	
The following piping materials and configurations are acceptable:	Schedule 40 Threaded, Welded & Grooved
	Schedule 80 Threaded & Welded

The following piping types and grades are acceptable for pipe configurations utilizing threaded, welded or grooved end connections:

Pipe Schedule	Pipe Size (mm)	Grade / Type						
		A-106C	A-53B A-106B	A-53B	A-53A A-106A	A-53A	A-53F	BS-1387
		Seamless	Seamless	ERW	Seamless	ERW	Furnace	Seamless
40 or 80	10	✓	✓	✓	✓	✓	✓	✓
	15	✓	✓	✓	✓	✓	✓	✓
	20	✓	✓	✓	✓	✓	✓	✓
	25	✓	✓	✓	✓	✓	✓	✓
	32	✓	✓	✓	✓	✓	✓	✓
	40	✓	✓	✓	✓	✓	✓	✓
	50	✓	✓	✓	✓	✓	✓	✓
	65	✓	✓	✓	✓	✓	✓	✓
	80	✓	✓	✓	✓	✓	✓	✓
	100	✓	✓	✓	✓	✓	✓	✓
	150	✓	✓	✓	✓	✓	✓	✓

While every precaution has been taken during the preparation of this document to ensure the accuracy of its content, Fike assumes no responsibility for errors or omissions.
Fike reserves the right to make changes to the product or this document without notice.

FITTING MATERIALS

Fitting materials **MUST** conform to the requirements outlined in NFPA 2001, latest edition.

FITTINGS SIZE	FITTING CLASS
Up to 80 mm	Class 300 malleable or ductile iron
Over 80 mm	1000 lb. ductile or forged steel
All pipe sizes	Class 300 flanged

NOTE: All grooved fittings must be UL Listed and conform to the pressure requirements outlined in NFPA 2001, latest edition. Cast Iron fittings are **NOT** acceptable.

PIPE SIZE CHANGE

Pipe size changes, to increase or decrease the size, can be done at three different locations in the piping network:

Pipe Size Change at a Tee	When the change in pipe size is done at a tee, this is accomplished by using either a reducing tee or a standard tee and reducing fittings. All reducers must be concentric bell reducers or concentric reducing couplings.
Pipe Size Change at an Elbow	When the change in pipe size is done at an elbow, this is accomplished by using either reducing elbows or a standard elbow with concentric bell reducers or concentric reducing couplings.
Pipe Size Change at a Coupling	When the change in pipe size accomplished at a coupling, only concentric bell reducers or concentric reducing couplings can be used.

NOTE: Reducing bushings, weld-o-let, and hole-cut fittings **"ARE NOT"** acceptable.

INSTALLATION

The piping system should be securely supported with due allowance for agent thrust forces, thermal expansion, and contraction, and should not be subject to mechanical, chemical, vibration, or other type of damage.
The maximum horizontal spacing for screwed, welded or grooved pipe are as indicated on the following table:

Pipe Size (mm)	**Distance Between Supports** (m)	**Rod Diameter** (mm)
10	2.2	10
15	2.2	10
20	2.1	10
25	2.2	10
32	2.2	10
40	2.8	10
50	3.1	10
65	3.4	15
80	3.7	15
100	4.3	20
150	5.2	25

NOTE:

- Each pipe section shall be cleaned internally before installation with a nonflammable cleaner such as Perchlorethylene in accordance with NFPA 2001, latest edition.
- Teflon tape or joint compound shall be used on all threaded joints. All grooved coupling gaskets shall be lubricated per the manufacturer's specifications.
- "C" Clamps are not acceptable to support rod hangers.
- Rigid pipe supports are required to support the "live load" of the pipe system during discharge. Rigid bracing is required at each directional change, fitting, tee and nozzle. All drops to 180° nozzles require back bracing in the opposite direction of the discharge. Earthquake bracing **shall** be used where required by local code. (Refer to ANSI B31.1 *Power Piping Code* for additional information)
- For additional information on pressure rating of pipe and fittings, plus recommended pipe supports and hangers, refer to FSSA's Pipe Design Handbook, FSSA PDH-01.
- All system piping shall be installed in strict accordance to system plans. If piping changes are necessary, they must be recalculated on Fike's Flow Calculation Program.

CONNECTION – CONTAINER TO PIPING NETWORK

The container discharge valve outlet is connected to the piping network using the following items:

Discharge Valve Size	Fittings Required	Comments
25 mm	25 mm Victaulic Coupling (p/n 02-9964)	Supplied w/ Container (26 & 45 L)
	25 mm Adapter Nipple (p/n 70-2164)	
	25 mm Coupling or Union (not shown)	Supplied by Others
80 mm	80 mm Victaulic Coupling (p/n 02-1987)	Supplied w/ Container (83 &150 L)
	80 mm Adapter Nipple (p/n 70-2163)	
	80 mm Coupling or Union (not shown)	Supplied by Others

NOTES:

1) It is not necessary to supply a pipe union after the grooved coupling to facilitate removal of the container for service or maintenance purposes. The container can be removed by removing the grooved coupling provided with each container.

2) Adapter Nipple is supplied with 1/4" NPT female threads (plugged) to connect to:
   - Discharge Pressure Switch
   - Used to provide pressure to activate slave container(s)

IMPORTANT NOTE: Remove the Baffle Plate located inside the grooved coupling before connecting the discharge piping to the container. The Baffle Plate is an anti-recoil device that must be installed whenever transporting or handling pressurized containers that are not connected to the discharge piping.

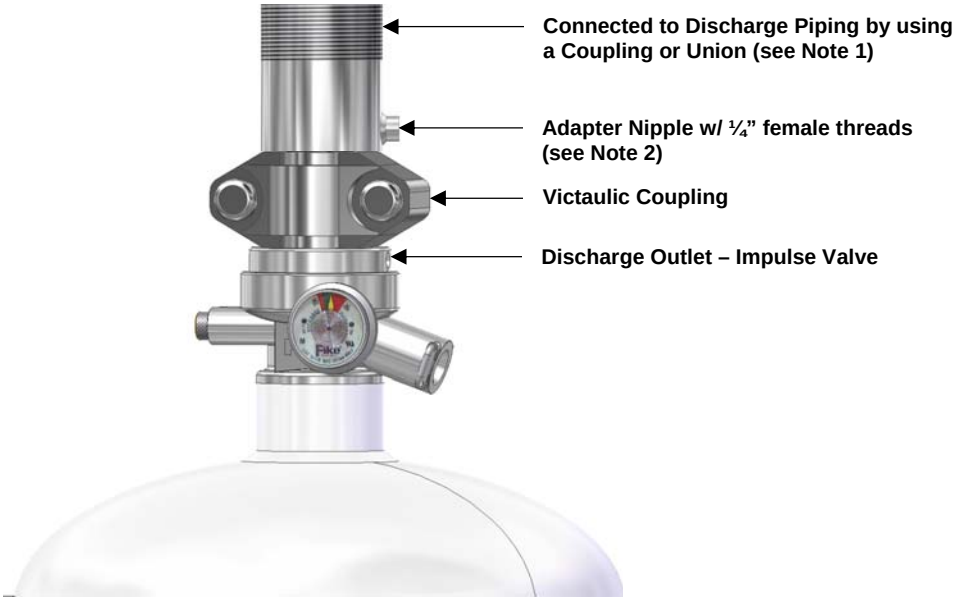

Front View

DISCHARGE PRESSURE SWITCH COMPONENT SHEET

Discharge Pressure Switch (DPS) is used to provide a positive pneumatic confirmation to the control system that the Fike Fire Suppression system has been discharged.

When a system is discharged manually (by Impulse Valve Operator (IVO) with Strike Button), the discharge pressure switch is required to provide the input to the control system needed to activate various audio/visual warning devices and auxiliary relays.

The switch is operated pneumatically using the agent pressure in the discharge piping network.

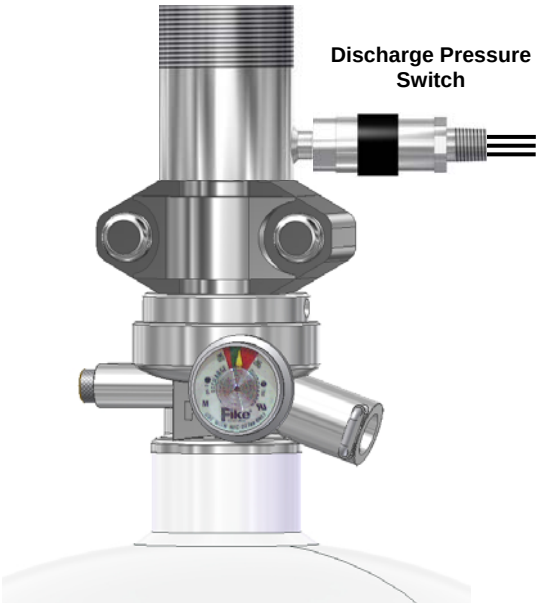

Discharge Pressure Switch

Container w/ Impulse Valve

SPECIFICATIONS – DISCHARGE PRESSURE SWITCH	
Part Number	02-12534
Temperature Limits	0 to 54.4°C
Enclosure Classification	NEMA 4
Contact Rating	Single pole, double throw; 5 amps resistive, 3 amps inductive @ 30VDC (can be wired for normally open or normally closed operation)
Body Material	Aluminum with irridite finish
Weight	0.2 kg
Pressure Connection	6 mm
DPS Length (approximate)	121 mm Long (including both connectors)
Electrical Connection	15 mm
Wire Leads	(3) 18 gauge x 1.2m long Violet (Common), Blue (N.O.), Black (N.C.)
Pressure Setting	3 bar (Increasing)
APPROVALS	UL Ex4623 / FM 3034180

While every precaution has been taken during the preparation of this document to ensure the accuracy of its content, Fike assumes no responsibility for errors or omissions.
Fike reserves the right to make changes to the product or this document without notice.

INSTALLATION

Discharge Pressure Switch is installed in the 1/4" NPT (female threads) port machined into the Adapter Nipple as shown in the illustration below. (see Figure 1)

Step 1: Remove rubber cap and apply Teflon Tape to the male threads of the Discharge Pressure Switch.

Step 2: Remove ¼" pipe plug from Adapter Nipple.

Step 3: Thread Discharge Pressure Switch into ¼" NPT port on Adaptor Nipple (Wrench tight).

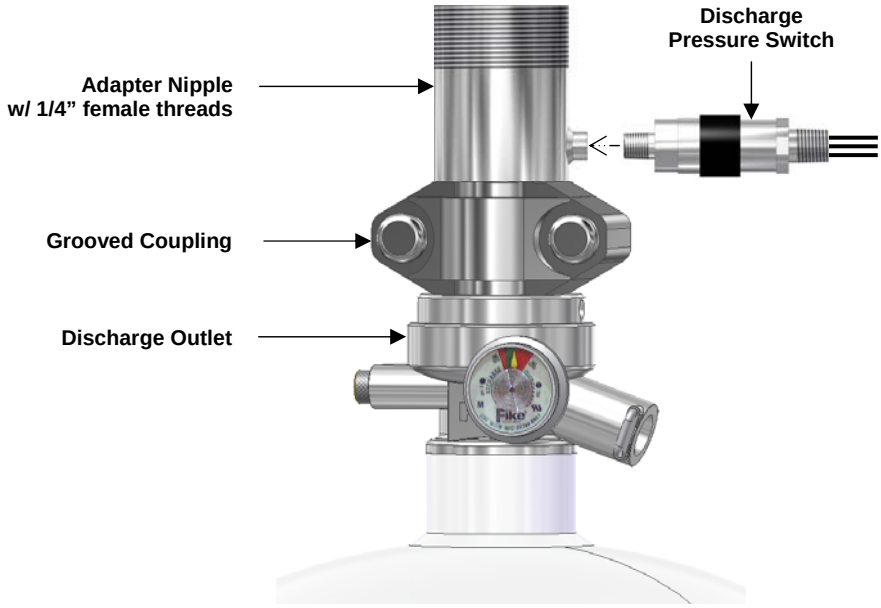

FIGURE 1

WIRING DIAGRAM

Following is a typical wiring diagram showing how the discharge pressure switch is wired to the manual release input of the Fike SHP PRO control panel. (see Figure 2) For control panel wiring details, refer to the SHP PRO manual (p/n 06-297).

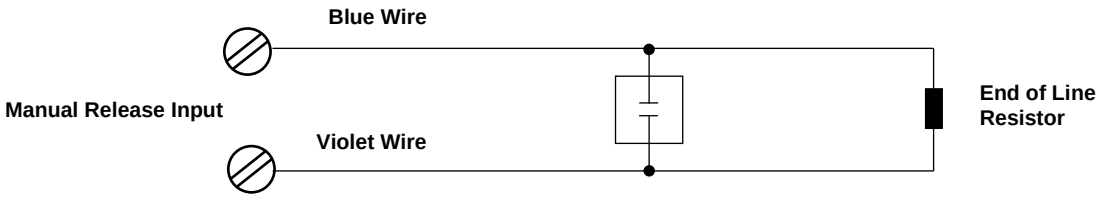

FIGURE 2

Discharge Pressure Switch
Normally Open Contacts
(closes when pressure applied)

When the Cheetah Xi or Xi50 is used, the switch can connect to a monitor module (MM) programmed for latching manual release. For control panel wiring details, refer to the Cheetah Xi manual (p/n 06-356) or Cheetah Xi50 manual (p/n 06-369).

DISCHARGE NOZZLES – HFC-227EA COMPONENT SHEET

The function of the Fike discharge nozzle is to control the agent flow and distribute the agent throughout the protected enclosure in a uniform, predetermined pattern and concentration.

The discharge nozzle size refers to the size of schedule 40 or 80 pipe that it can be connected to.

The discharge nozzle is mounted to allow the agent to be discharge on a horizontal axis.

The nozzle orifice area is determined be performing a hydraulic calculation using the Fike Engineered Flow Calculation program.

Nozzle should not be ordered until the clean agent system pipe network is installed and an "As Built" hydraulic calculation is performed.

Nozzle orifice drilling must be done at Fike factory or at a UL listed Nozzle Drill Station.

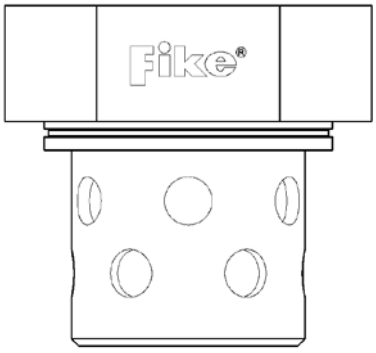

360° Nozzle

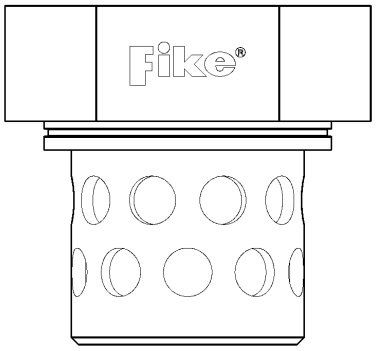

180° Nozzle

Nozzle Size (mm)	**360° Engineered Nozzles** (12 Orifices)			**180° Engineered Nozzles** (11 Orifices)			**Nozzle Length** (Approx.) (mm)
	Part Number	**Drill Dia.** (mm)		**Part Number**	**Drill Dia.** (mm)		
		Minimum	**Maximum**		**Minimum**	**Maximum**	
10	84-045-XXXX	1.5	3.2	84-052-XXXX	1.5	3.3	46
15	84-046-XXXX	1.5	4.1	84-053-XXXX	1.5	4.3	48
20	84-047-XXXX	2.0	5.4	84-054-XXXX	2.3	5.7	56
25	84-048-XXXX	2.7	6.7	84-055-XXXX	2.9	7.2	64
32	84-049-XXXX	3.5	8.9	84-056-XXXX	3.8	9.4	79
40	84-050-XXXX	4.3	10.5	84-057-XXXX	4.4	10.8	86
50	84-051-XXXX	5.4	13.5	84-058-XXXX	5.6	13.9	95
Thread Type	BSP						
Material	Brass						
Listing & Approvals	UL / ULC Listed & FM Approved						

While every precaution has been taken during the preparation of this document to ensure the accuracy of its content, Fike assumes no responsibility for errors or omissions.
Fike reserves the right to make changes to the product or this document without notice.

INSTALLATION

Always verify the nozzle identification number (stamped on the closed end of the nozzle) matches the nozzle part number listed on the system installation plans. All nozzle locations should be within 0.3m of their intended locations on the system plans. Discharge Nozzles must be mounted in the vertical position and can face either up or down.

CAUTION: The piping should be blown clear to remove chips, mill scale, or metal shavings before the nozzles are installed.

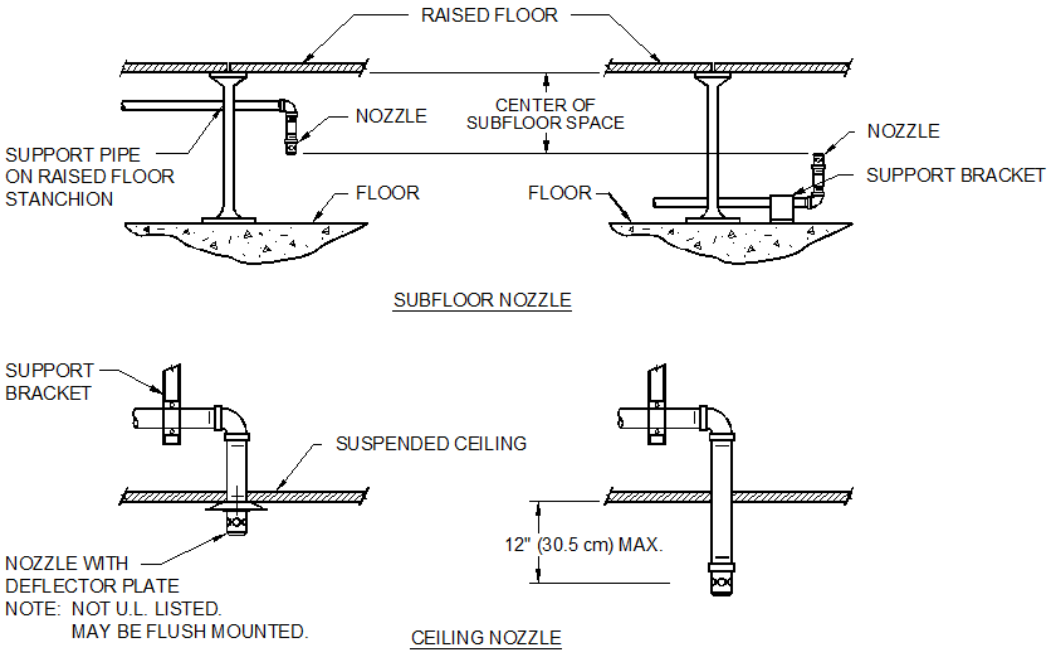

360° NOZZLES

360° Nozzles should be located in a symmetrical, or near symmetrical, pattern within the protected area. Nozzle patterns need to overlap, to adequately cover the area without any "blind spots" due to nozzle locations. Apply to all nozzle types.

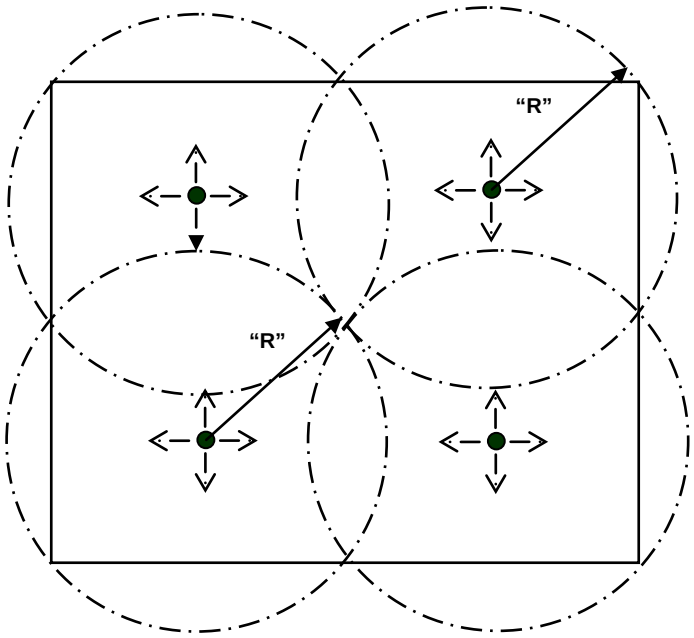

180° NOZZLES

180° Nozzles should be located in a symmetrical, or near symmetrical, pattern within the protected area. 180° Nozzles should be located along the perimeter of the area – discharging along the perimeter and toward the opposite side. These nozzles can be located a maximum of 0.3 m out from the wall.

180° Nozzles generate a reactive force in the opposite direction from the nozzle discharge orifices. Rigid pipe bracing must be attached to the nozzle drop to counteract the expected movement.

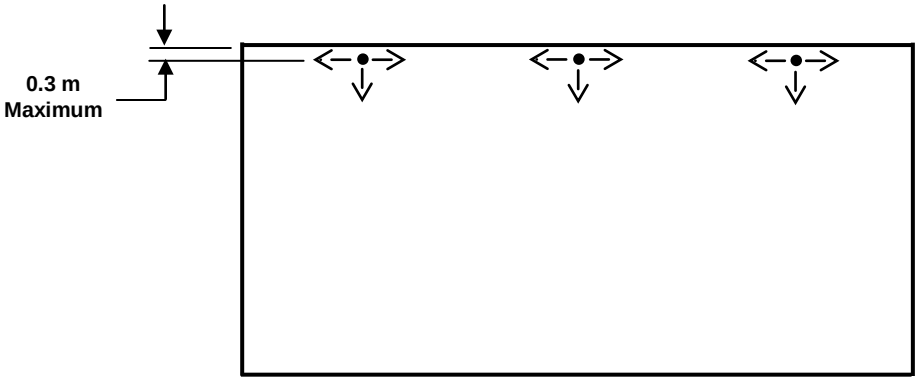

180° NOZZLES – BACK to BACK APPLICATION

180° Nozzles can be installed in a back to back arrangement within the following limitations:

- Maximum distance between nozzles = 0.3 m
- Agent supplied and flow rate from both nozzles are the same.
- Pipe size from tee to both nozzles is the same.
- Pipe lengths from tee to each nozzle are within 10% of each other.

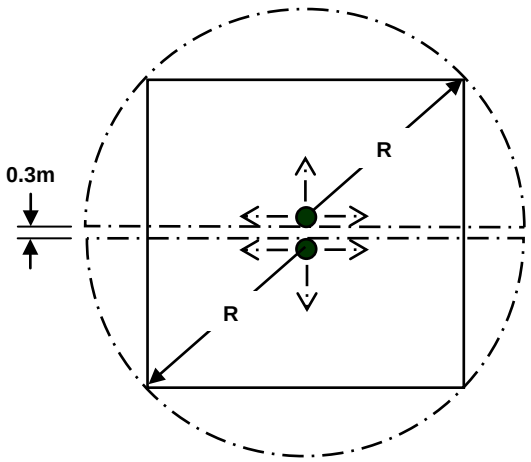

NOZZLE AREA COVERAGE

Nozzle Size – 10 – 50 mm		
Nozzle Type	**Radius "R" Dimension** (m)	**Ceiling Height Range** (m)
180°	14	0.3 to 4.9
360°	9	0.3 to 4.9

Maximum Distance	**180° Nozzle (m)**	**360° Nozzle (m)**	**Note**
Below Ceiling	0.3	0.3	Maximum distance above highest point of protection when stacking nozzles.
Away from Sidewall	0.3	---	

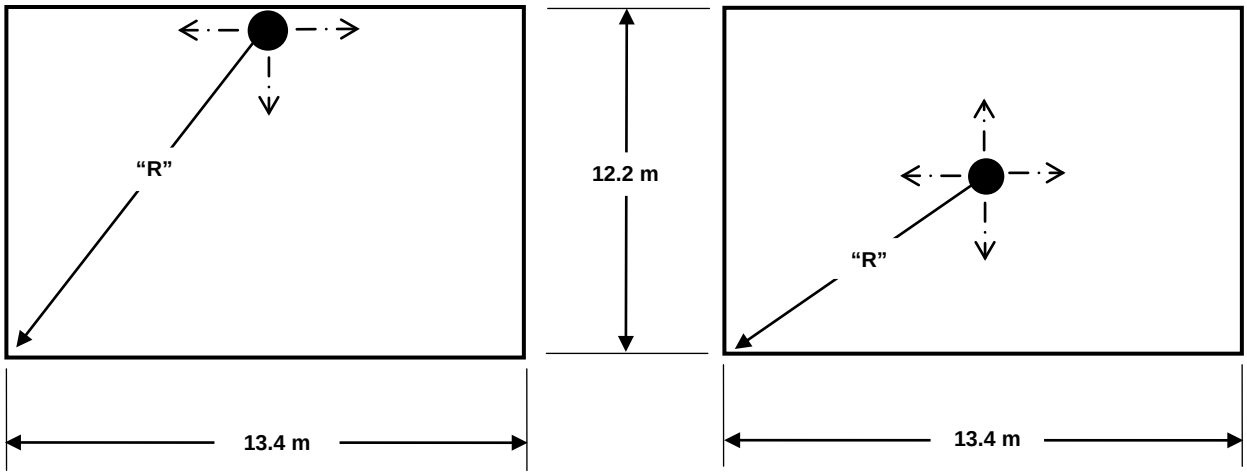

CHECK VALVE COMPONENT SHEET

Check Valves are used prevent agent loss from the open end of a manifold and/or piping system in the event that one or more containers are removed for servicing / maintenance.

Check Valves are required for multiple containers connected in a manifold arrangement and for containers used in a main / reserve system, without the need for redundant piping systems, to prevent agent loss and to ensure personnel safety if the system is operated when any containers are removed for maintenance. All containers must be the same size & same weight.

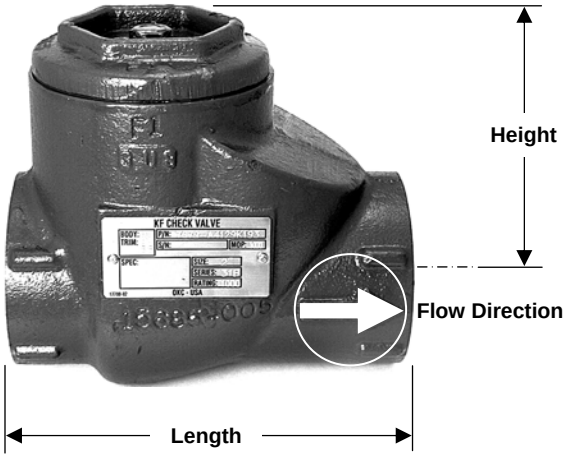

CHECK VALVE DATA		DIMENSIONS		APPROXIMATE WEIGHT (kg)	EQUIVALENT LENGTH (m)
PART NO.	**DESCRIPTION**	**HEIGHT** (mm)	**LENGTH** (mm)		
02-2980	1” (25 mm) Check Valve	95 (maximum)	108	4.1	0.61
02-4158	2” (50 mm) Check Valve	144 (maximum)	152	5.4	1.22
02-4157	3” (80 mm) Check Valve	152	203	14.1	1.37
MATERIAL		Carbon Steel			
WORKING PRESSURE		50 bar			
THREAD TYPE		Female NPT (Both Ends)			
APPROVALS		UL Ex4623 / FM 3034180			
NOTE: Check Valves have threaded female connections on both ends; therefore piping leading into and exiting from must be threaded.					
IMPORTANT NOTE: The Check Valves **must** be installed with the flow arrow pointing in the direction of discharge. If reversed, the system will not discharge.					

While every precaution has been taken during the preparation of this document to ensure the accuracy of its content, Fike assumes no responsibility for errors or omissions.
Fike reserves the right to make changes to the product or this document without notice.

INSTALLATION

Once the pipe / manifold is assembled and the containers connected, the pipe / manifold should not be supported by the containers. The piping should be secured with pipe hangers or brackets to support the manifold when the containers are removed for service.

If grooved couplings are used, the gaskets must be lubricated with a non-petroleum base lubricant as recommended by the fitting manufacturer.

Manifolds are commonly assembled using grooved fittings, however threaded; welded or flanged fittings can also be used. Teflon tape or joint compound shall be used on all threaded joints.

EXAMPLE – CENTER EXIT MANIFOLD / MAIN & RESERVE SYSTEM

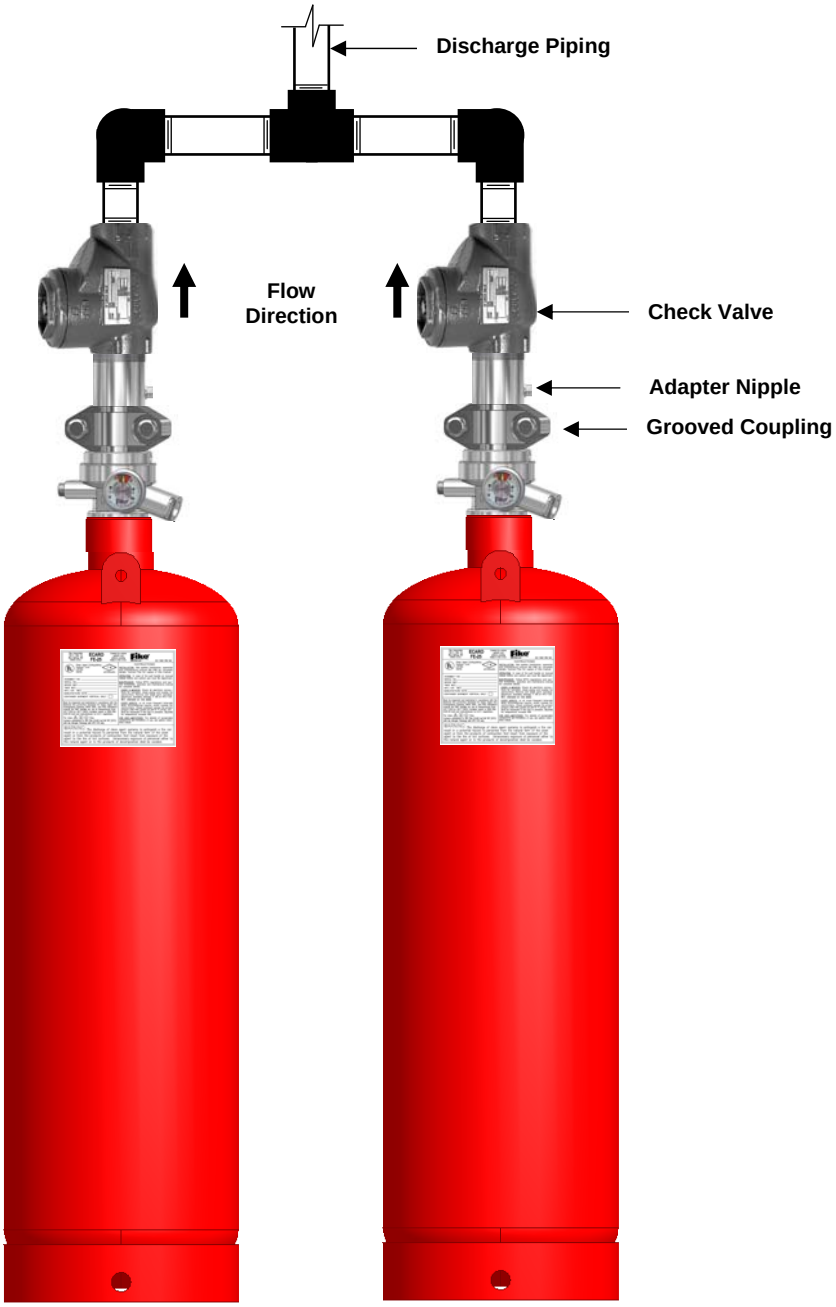

CAUTION / ADVISORY SIGNS – HFC-227EA COMPONENT SHEET

Caution / Advisory Signs are provided to comply with NFPA 2001 and ISO requirements, and to provide the necessary information to personnel in the area. The signs are made from flame retardant, Lexan™ polycarbonate material.

Optional Item – Caution / Advisory signs must be ordered separately.

CAUTION SIGN (P/N 02-4694)



This sign is provided to alert personnel that the room is protected with an HFC-227ea system and to evacuate the area when the alarms sound. The sign measures 160mm x 160mm.

The Caution Sign should be placed on the outside of each door entering the protected space.

MANUAL DISCHARGE STATION (P/N 02-4695)

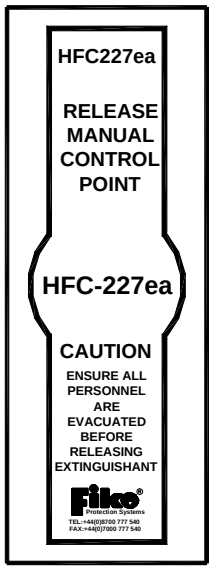

This sign is provided to identify each manual release station associated with the HFC-227ea system. This reduces the risk of a manual discharge station being mistaken for a fire alarm pull station. This sign measures 195mm x 70mm.

The Manual Discharge Station Sign should be placed at each manual release station location for positive identification.

While every precaution has been taken during the preparation of this document to ensure the accuracy of its content, Fike assumes no responsibility for errors or omissions.
Fike reserves the right to make changes to the product or this document without notice.

CAUTION – AREA PROTECTED BY HFC-227ea SIGN – p/n 02-10139



Provided to alert personnel that the room is protected with an HFC-227ea system and that they should not enter the area during or after discharge.

The sign also indicates the requirement that all doors serving the protected area must be kept closed at all times.

The sign is 330 mm x 254 mm, with black lettering on a yellow background for Caution and black lettering on a white background for Sign text.

CAUTION – SYSTEM DISCHARGE ALARM SIGN – p/n 02-10138



Provided to alert personnel that the room is protected with an HFC-227ea system and to evacuate the area when the alarms sound.

This sign is provided to alert personnel that the room is protected with an HFC-227ea system and that they should not enter the area when the alarm sounds.

The sign is 229 mm x 154 mm, with black lettering on a yellow background for Caution and black lettering on a white background for Sign text.

CAUTION – EXIT AREA SIGN – p/n 02-10105



Provided to explain the presence of notification devices that are located inside the protected space.

This sign explains that the HFC-227ea system will soon be discharged if the strobe light is flashing, and appropriate actions should be taken.

This sign should be placed at each strobe light location.

The sign is 229 mm x 154 mm, with black lettering on a yellow background for Caution and black lettering on a white background for Sign text.

SYSTEM RELEASE SIGN – p/n 02-10137



Provided to identify each system release station associated with the HFC-227ea system.

This reduces the risk of a manual discharge station being mistaken for a fire alarm pull station.

This sign should be placed at each manual release station location for positive identification. This sign is 102 mm x 57 mm, with black lettering on a white background.

FIKE CLEAN AGENT SYSTEM W/ IMPULSE TECHNOLOGY HFC-227EA AGENT

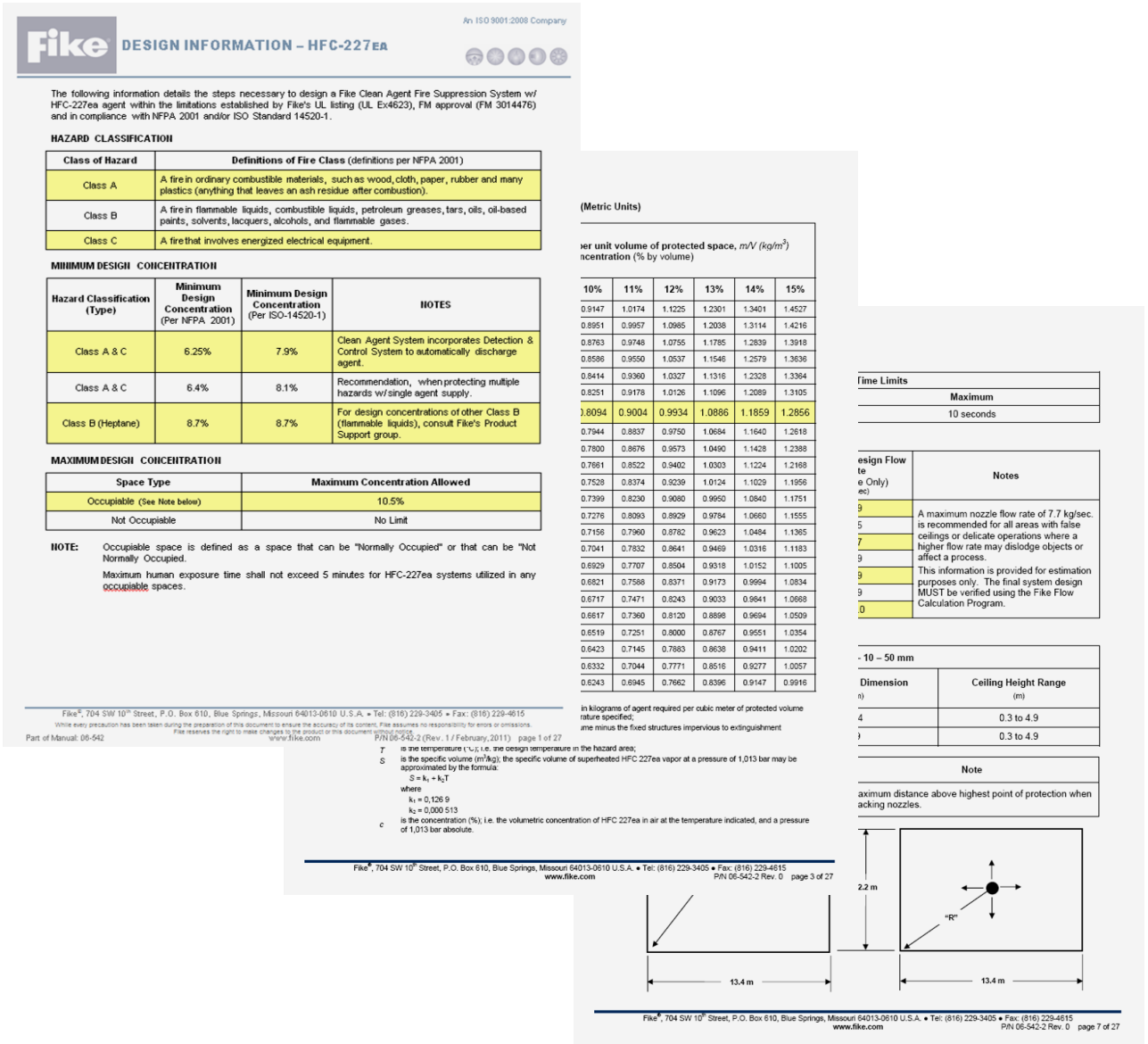

Fike DESIGN INFORMATION – HFC-227EA

An ISO 9001:2008 Company

The following information details the steps necessary to design a Fike Clean Agent Fire Suppression System w/ HFC-227ea agent within the limitations established by Fike's UL listing (UL Ex4623), FM approval (FM 3014476) and in compliance with NFPA 2001 and/or ISO Standard 14520-1.

HAZARD CLASSIFICATION

Class of Hazard	Definitions of Fire Class (definitions per NFPA 2001)
Class A	A fire in ordinary combustible materials, such as wood, cloth, paper, rubber and many plastics (anything that leaves an ash residue after combustion).
Class B	A fire in flammable liquids, combustible liquids, petroleum greases, tars, oils, oil-based paints, solvents, lacquers, alcohols, and flammable gases.
Class C	A fire that involves energized electrical equipment.

MINIMUM DESIGN CONCENTRATION

Hazard Classification (Type)	Minimum Design Concentration (Per NFPA 2001)	Minimum Design Concentration (Per ISO-14520-1)	NOTES
Class A & C	6.25%	7.9%	Clean Agent System incorporates Detection & Control System to automatically discharge agent.
Class A & C	6.4%	8.1%	Recommendation, when protecting multiple hazards w/ single agent supply.
Class B (Heptane)	8.7%	8.7%	For design concentrations of other Class B (flammable liquids), consult Fike's Product Support group.

MAXIMUM DESIGN CONCENTRATION

Space Type	Maximum Concentration Allowed
Occupiable (See Note below)	10.5%
Not Occupiable	No Limit

NOTE: Occupiable space is defined as a space that can be "Normally Occupied" or that can be "Not Normally Occupied.

Maximum human exposure time shall not exceed 5 minutes for HFC-227ea systems utilized in any occupiable spaces.

Fike®, 704 SW 10th Street, P.O. Box 610, Blue Springs, Missouri 64013-0610 U.S.A. • Tel: (816) 229-3405 • Fax: (816) 229-4615
While every precaution has been taken during the preparation of this document to ensure the accuracy of its content, Fike assumes no responsibility for errors or omissions.
Part of Manual: 06-542 File reserves the right to make changes to the product or this document without notice. www.fike.com P/N 06-542-2 (Rev. 1 / February, 2011) page 1 of 27

(Metric Units)

er unit volume of protected space, *m/V (kg/m³)*
ncentration (% by volume)

10%	11%	12%	13%	14%	15%
0.9147	1.0174	1.1225	1.2301	1.3401	1.4527
0.8951	0.9957	1.0985	1.2038	1.3114	1.4216
0.8763	0.9748	1.0755	1.1785	1.2839	1.3918
0.8586	0.9550	1.0537	1.1546	1.2579	1.3636
0.8414	0.9360	1.0327	1.1316	1.2328	1.3364
0.8251	0.9178	1.0126	1.1096	1.2089	1.3105
.8094	0.9004	0.9934	1.0886	1.1859	1.2856
0.7944	0.8837	0.9750	1.0684	1.1640	1.2618
0.7800	0.8676	0.9573	1.0490	1.1428	1.2388
0.7661	0.8522	0.9402	1.0303	1.1224	1.2168
0.7528	0.8374	0.9239	1.0124	1.1029	1.1956
0.7399	0.8230	0.9080	0.9950	1.0840	1.1751
0.7276	0.8093	0.8929	0.9784	1.0660	1.1555
0.7156	0.7960	0.8782	0.9623	1.0484	1.1365
0.7041	0.7832	0.8641	0.9469	1.0316	1.1183
0.6929	0.7707	0.8504	0.9318	1.0152	1.1005
0.6821	0.7588	0.8371	0.9173	0.9994	1.0834
0.6717	0.7471	0.8243	0.9033	0.9841	1.0668
0.6617	0.7360	0.8120	0.8898	0.9694	1.0509
0.6519	0.7251	0.8000	0.8767	0.9551	1.0354
0.6423	0.7145	0.7883	0.8638	0.9411	1.0202
0.6332	0.7044	0.7771	0.8516	0.9277	1.0057
0.6243	0.6945	0.7662	0.8396	0.9147	0.9916

in kilograms of agent required per cubic meter of protected volume
rature specified;
ame minus the fixed structures impervious to extinguishment

T is the temperature (°C); i.e. the design temperature in the hazard area;

S is the specific volume (m^3/kg); the specific volume of superheated HFC 227ea vapor at a pressure of 1,013 bar may be approximated by the formula:

$S = k_1 + k_2 T$

where

$k_1 = 0{,}126\,9$

$k_2 = 0{,}000\,513$

c is the concentration (%); i.e. the volumetric concentration of HFC 227ea in air at the temperature indicated, and a pressure of 1,013 bar absolute.

Fike®, 704 SW 10th Street, P.O. Box 610, Blue Springs, Missouri 64013-0610 U.S.A. • Tel: (816) 229-3405 • Fax: (816) 229-4615
www.fike.com P/N 06-542-2 Rev. 0 page 3 of 27

Time Limits

Maximum
10 seconds

esign Flow te e Only) ec)	Notes
9	A maximum nozzle flow rate of 7.7 kg/sec. is recommended for all areas with false ceilings or delicate operations where a higher flow rate may dislodge objects or affect a process. This information is provided for estimation purposes only. The final system design MUST be verified using the Fike Flow Calculation Program.
5	
7	
9	
9	
9	
.0	

- 10 – 50 mm

Dimension n)	Ceiling Height Range (m)
4	0.3 to 4.9
)	0.3 to 4.9

Note
aximum distance above highest point of protection when acking nozzles.

Fike®, 704 SW 10th Street, P.O. Box 610, Blue Springs, Missouri 64013-0610 U.S.A. • Tel: (816) 229-3405 • Fax: (816) 229-4615
www.fike.com P/N 06-542-2 Rev. 0 page 7 of 27

While every precaution has been taken during the preparation of this document to ensure the accuracy of its content, Fike assumes no responsibility for errors or omissions. Fike reserves the right to make changes to the product or this document without notice.

The following information details the steps necessary to design a Fike Clean Agent Fire Suppression System w/ HFC-227ea agent within the limitations established by Fike's UL listing (UL Ex4623), FM approval (FM 3014476) and in compliance with NFPA 2001 and/or ISO Standard 14520-1.

HAZARD CLASSIFICATION

Class of Hazard	**Definitions of Fire Class** (definitions per NFPA 2001)
Class A	A fire in ordinary combustible materials, such as wood, cloth, paper, rubber and many plastics (anything that leaves an ash residue after combustion).
Class B	A fire in flammable liquids, combustible liquids, petroleum greases, tars, oils, oil-based paints, solvents, lacquers, alcohols, and flammable gases.
Class C	A fire that involves energized electrical equipment.

MINIMUM DESIGN CONCENTRATION

Hazard Classification (Type)	**Minimum Design Concentration** (Per NFPA 2001)	**Minimum Design Concentration** (Per ISO-14520-1)	**NOTES**
Class A & C	6.25%	7.9%	Clean Agent System incorporates Detection & Control System to automatically discharge agent.
Class A & C	6.4%	8.1%	Recommendation, when protecting multiple hazards w/ single agent supply.
Class B (Heptane)	8.7%	8.7%	For design concentrations of other Class B (flammable liquids), consult Fike's Product Support group.

MAXIMUM DESIGN CONCENTRATION

Space Type	**Maximum Concentration Allowed**
Occupiable (See Note below)	10.5%
Not Occupiable	No Limit

NOTE: Occupiable space is defined as a space that can be "Normally Occupied" or that can be "Not Normally Occupied.

Maximum human exposure time shall not exceed 5 minutes for HFC-227ea systems utilized in any occupiable spaces.

While every precaution has been taken during the preparation of this document to ensure the accuracy of its content, Fike assumes no responsibility for errors or omissions. Fike reserves the right to make changes to the product or this document without notice.

ENCLOSURE VOLUME

FORMULA	NOTES
Protected Volume =	As a general rule, Hazard Volume should be based on the empty (gross) volume.
Base Volume	Length x Width x Height
+ Added Volume	Volume that is open to the space being protected (i.e. non-dampered ductwork, uncloseable openings, etc.)
- Removed Volume	Volume for items that are solid, non-permeable, and non-removable objects can be deducted from the protected volume
IMPORTANT NOTE:	Any object that can be removed from the protected space **CANNOT** be deducted from the volume

AGENT REQUIRED

Calculation Based on:	Lowest Expected Ambient Temperature	Minimum Design Concentration Required (to protect this type of hazard)

The agent quantity needed can be determined by the following formula:

$$W = \frac{V}{S}\left(\frac{C}{100 - C}\right)$$

Where: W = Agent Weight in kg

V = Hazard Volume / m^3

C = Design Concentration, % by volume

S = Specific Vapor in m^3/kg

S = k1 + k2 (t)

Where: k1 = 0.1269, k2 = 0.0005(t), t = temperature (^oC)

NOTE: The equation to calculate S is an approximation.

While every precaution has been taken during the preparation of this document to ensure the accuracy of its content, Fike assumes no responsibility for errors or omissions. Fike reserves the right to make changes to the product or this document without notice.

FLOODING FACTORS – Agent vs. Temperature Charts (Metric Units)

Temp. *T*	**Specific Vapor Volume** *S*	**HFC 227ea mass requirements per unit volume of protected space,** *m/V (kg/m³)* **Design Concentration** (% by volume)									
(°C)	**(m³/kg)**	**6%**	**7%**	**8%**	**9%**	**10%**	**11%**	**12%**	**13%**	**14%**	**15%**
-10	0.1215	0.5254	0.6196	0.7158	0.8142	0.9147	1.0174	1.1225	1.2301	1.3401	1.4527
-5	0.1241	0.5142	0.6064	0.7005	0.7967	0.8951	0.9957	1.0985	1.2038	1.3114	1.4216
0	0.1268	0.5034	0.5936	0.6858	0.7800	0.8763	0.9748	1.0755	1.1785	1.2839	1.3918
5	0.1294	0.4932	0.5816	0.6719	0.7642	0.8586	0.9550	1.0537	1.1546	1.2579	1.3636
10	0.1320	0.4834	0.5700	0.6585	0.7490	0.8414	0.9360	1.0327	1.1316	1.2328	1.3364
15	0.1347	0.4740	0.5589	0.6457	0.7344	0.8251	0.9178	1.0126	1.1096	1.2089	1.3105
20	0.1373	0.4650	0.5483	0.6335	0.7205	0.8094	0.9004	0.9934	1.0886	1.1859	1.2856
25	0.1399	0.4564	0.5382	0.6217	0.7071	0.7944	0.8837	0.9750	1.0684	1.1640	1.2618
30	0.1425	0.4481	0.5284	0.6104	0.6943	0.7800	0.8676	0.9573	1.0490	1.1428	1.2388
35	0.1450	0.4401	0.5190	0.5996	0.6819	0.7661	0.8522	0.9402	1.0303	1.1224	1.2168
40	0.1476	0.4324	0.5099	0.5891	0.6701	0.7528	0.8374	0.9239	1.0124	1.1029	1.1956
45	0.1502	0.4250	0.5012	0.5790	0.6586	0.7399	0.8230	0.9080	0.9950	1.0840	1.1751
50	0.1527	0.4180	0.4929	0.5694	0.6476	0.7276	0.8093	0.8929	0.9784	1.0660	1.1555
55	0.1553	0.4111	0.4847	0.5600	0.6369	0.7156	0.7960	0.8782	0.9623	1.0484	1.1365
60	0.1578	0.4045	0.4770	0.5510	0.6267	0.7041	0.7832	0.8641	0.9469	1.0316	1.1183
65	0.1604	0.3980	0.4694	0.5423	0.6167	0.6929	0.7707	0.8504	0.9318	1.0152	1.1005
70	0.1629	0.3919	0.4621	0.5338	0.6072	0.6821	0.7588	0.8371	0.9173	0.9994	1.0834
75	0.1654	0.3859	0.4550	0.5257	0.5979	0.6717	0.7471	0.8243	0.9033	0.9841	1.0668
80	0.1679	0.3801	0.4482	0.5178	0.5890	0.6617	0.7360	0.8120	0.8898	0.9694	1.0509
85	0.1704	0.3745	0.4416	0.5102	0.5803	0.6519	0.7251	0.8000	0.8767	0.9551	1.0354
90	0.1730	0.3690	0.4351	0.5027	0.5717	0.6423	0.7145	0.7883	0.8638	0.9411	1.0202
95	0.1755	0.3638	0.4290	0.4956	0.5636	0.6332	0.7044	0.7771	0.8516	0.9277	1.0057
100	0.1780	0.3587	0.4229	0.4886	0.5557	0.6243	0.6945	0.7662	0.8396	0.9147	0.9916

Symbols:

m/V is the agent mass requirements (kg/m³); i.e. mass, *m*, in kilograms of agent required per cubic meter of protected volume *V* to produce the indicated concentration at the temperature specified;

V is the net volume of hazard (m³); i.e. the enclosed volume minus the fixed structures impervious to extinguishment

$m = (c / (100 - c))*(V / S)$

T is the temperature (°C); i.e. the design temperature in the hazard area;

S is the specific volume (m³/kg); the specific volume of superheated HFC 227ea vapor at a pressure of 1,013 bar may be approximated by the formula:

$S = k_1 + k_2T$

where

$k_1 = 0{,}126\ 9$

$k_2 = 0{,}000\ 513$

c is the concentration (%); i.e. the volumetric concentration of HFC 227ea in air at the temperature indicated, and a pressure of 1,013 bar absolute.

While every precaution has been taken during the preparation of this document to ensure the accuracy of its content, Fike assumes no responsibility for errors or omissions. Fike reserves the right to make changes to the product or this document without notice.

TEE DESIGN FACTOR

Definition:	When a single agent supply is being used to protect multiple hazards, a tee design factor is applied when more than 4 tees are used in multiple hazard applications.

Steps:		**Tee Count**	**Design Factor**
1	Starting from the point where the piping enters the hazard that is located farthest (hydraulically) from the agent container(s), count the number of tees in the direct flow path as it returns to the agent container(s). **Do Not** include the tees that are used in the manifold (if applicable).	0 – 4	0.00
		5	0.01
		6	0.02
		7	0.03
		8	0.04
2	Any tee within the hazard that supplies agent to another hazard shall be included in the tee count.	9	0.05
		10	0.06
3	After counting the tees, compare that number to the chart above to determine the Tee Design Factor	11 - 12	0.07
		13	0.08
		14 - 15	0.09
4	Apply the Tee Design Factor to the Agent Quantity calculations by multiplying the Tee Design Factor by the amount of agent previously determined in the volumetric calculations	16	0.10
		17 - 18	0.11
		19	0.12

EXAMPLE:

This example shows a multi-hazard area arrangement. Starting at the point where the piping enters the hazard farthest away, count the number of tees leading back to the agent container. With a tee count of five (5), an additional 1% (0.01) of agent is required. Therefore, the base quantity of agent is multiplied by 1.01 (1%) to determine the adjusted quantity of agent required

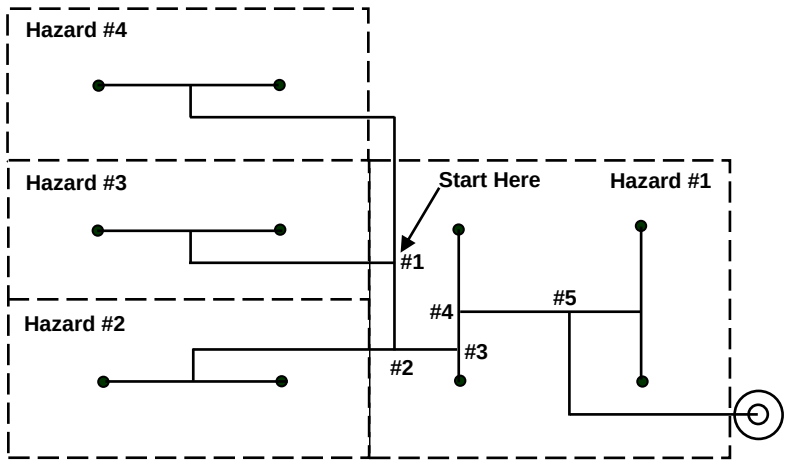

NOTE: Fike recommends increasing the design concentration to 6.4% when protecting multiple hazards w/ single agent supply. This will satisfy the tee design factor requirement.

While every precaution has been taken during the preparation of this document to ensure the accuracy of its content, Fike assumes no responsibility for errors or omissions. Fike reserves the right to make changes to the product or this document without notice.

ALTITUDE CORRECTION FACTORS

Definition	Where compensation is made when pressure varies from standard sea level pressure due to elevation change.
Altitude (m)	**Correction Factor**
-1,000	1.11
0	1.00
1,000	0.89
1,500	0.82
2,000	0.78
2,500	0.72
3,000	0.70
3,500	0.65
4,000	0.61
4,500	0.57

NOTE: The Fike flow calculation program will automatically calculate the agent required based altitude correction factor entered

CONCENTRATION AT MAXIMUM TEMPERATURE

The expected concentration at maximum temperature can be determined by following formula:

$$C = \frac{100WS}{V + WS}$$

Where:

W = Agent Weight in kg

V = Hazard Volume / m^3

C = Design Concentration, % by volume

S = Specific Vapor in m^3/kg

Refer to Flooding Factor Table on page 3 to determine the S value

NOTE: This is a necessary step to properly evaluate the exposure and egress time limitations discussed in the beginning of this section.

The Fike flow calculation program will automatically calculate concentration at the maximum temperature entered.

While every precaution has been taken during the preparation of this document to ensure the accuracy of its content, Fike assumes no responsibility for errors or omissions. Fike reserves the right to make changes to the product or this document without notice.

SYSTEM DESIGN CONCEPTS

Systems can be designed with the containers arranged in modular, central storage or manifolded arrangements as described below:

Modular System	Where the containers are located throughout or around the protected area(s) to keep the discharge piping requirements down to a minimum, but increases the electrical materials necessary to reach each individual container location.
Central Storage System	Where the containers are located in one location, and piped to the protected space(s) from this location. This concept often requires more discharge piping, but it decreases the electrical materials necessary to reach the singular container(s) location. This concept may be more difficult to design due to the increased piping runs involved, and the installation labor will tend to be more costly.

CONTAINER SIZE AND FILL RANGE

Refer the Equipment Section Agent Storage Container – HFC-227ea Component Sheet (p/n 06-542-1-2) for details.

TEMPERATURE LIMITATION

Description	Minimum	Maximum	Note
Container Storage / Location	0°C	54.4°C	At temperatures outside of this range, the system may not supply the desired quantity of agent or discharge due to over-pressure.
Flow Calculation Program	16°C	27°C	

While every precaution has been taken during the preparation of this document to ensure the accuracy of its content, Fike assumes no responsibility for errors or omissions. Fike reserves the right to make changes to the product or this document without notice.

SYSTEM DISCHARGE TIME

Discharge Time Limits	
Minimum	**Maximum**
6 seconds	10 seconds

NOZZLE FLOW RATE LIMITATION

Nominal Pipe Size (mm)	**Minimum Design Flow Rate** (System Limitation) (kg/sec)	**Maximum Design Flow Rate** (Estimate Only) (kg/sec)	**Notes**
10	0.3	0.9	A maximum nozzle flow rate of 7.7 kg/sec. is recommended for all areas with false ceilings or delicate operations where a higher flow rate may dislodge objects or affect a process. This information is provided for estimation purposes only. The final system design MUST be verified using the Fike Flow Calculation Program.
15	0.5	1.5	
20	0.9	2.7	
25	1.5	3.9	
32	2.6	5.9	
40	3.8	8.9	
50	5.9	15.0	

NOZZLE AREA COVERAGE

Nozzle Size – 10 – 50 mm		
Nozzle Type	**Radius "R" Dimension** (m)	**Ceiling Height Range** (m)
180°	14	0.3 to 4.9
360°	9	0.3 to 4.9

Maximum Distance	**180° Nozzle (m)**	**360° Nozzle (m)**	**Note**
Below Ceiling	0.3	0.3	Maximum distance above highest point of protection when stacking nozzles.
Away from Sidewall	0.3	---	

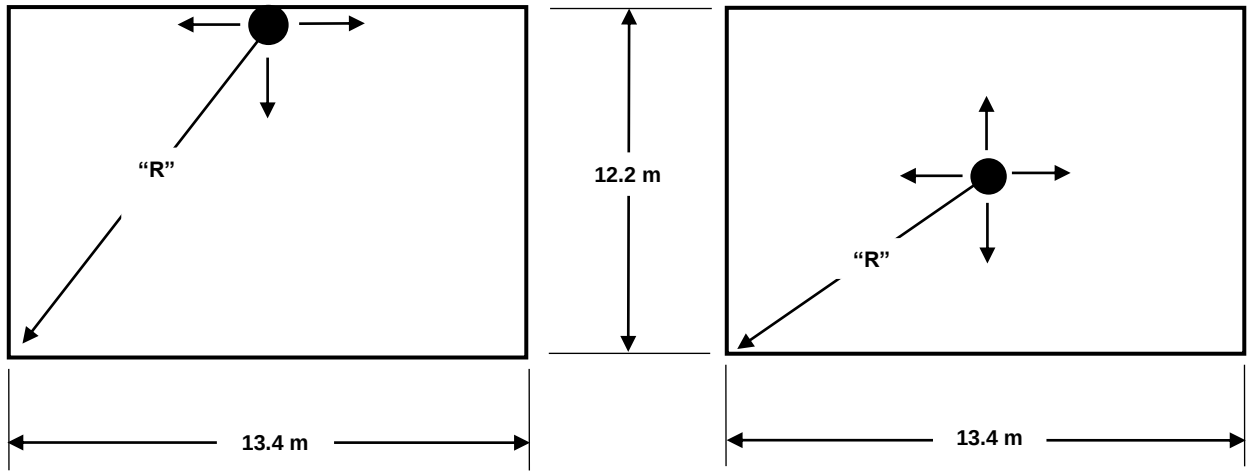

While every precaution has been taken during the preparation of this document to ensure the accuracy of its content, Fike assumes no responsibility for errors or omissions. Fike reserves the right to make changes to the product or this document without notice.

NOZZLE PLACEMENT

TYPE OF NOZZLE	PLACEMENT RECOMMENDATION	NOTES
360° Nozzle(s)	Located on, or near, the centerline of the protected area, discharging toward the perimeter of the area being covered.	Nozzle patterns need to overlap, to adequately cover the area without any "blind spots" due to nozzle locations. Apply to all Nozzle types. Refer to Figure 1

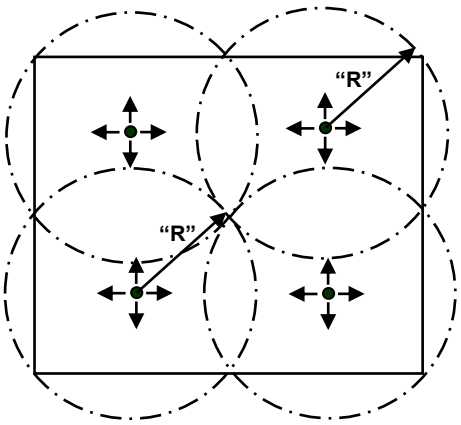

Figure 1

180° Nozzle(s)	Located along the perimeter of the area, discharging toward the opposite side.	Refer to Figure 2

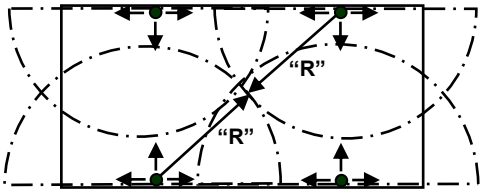

Figure 2

180° Nozzles – Back to Back Application	Maximum distance between nozzles is 1'-0" (0.3 m)	Refer to Figure 3

IMPORTANT NOTE:

The Minimum Piping Distance Rule outlined on page 12 **does not** apply when using back-to-back 180º nozzles as long as:

1) Agent supplied and flow rate from both nozzles are the same.
2) Pipe size from tee to both nozzles is the same.
3) Pipe lengths from tee to each nozzle are

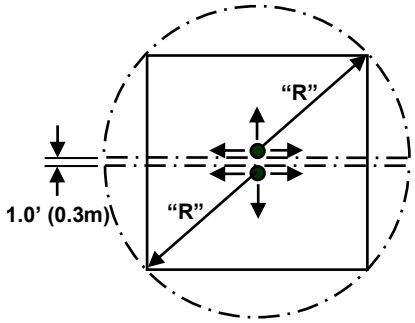

Figure 3

While every precaution has been taken during the preparation of this document to ensure the accuracy of its content, Fike assumes no responsibility for errors or omissions. Fike reserves the right to make changes to the product or this document without notice.

CEILING HEIGHT vs. LEVELS OF NOZZLES

Ceiling Height	Levels of Nozzles Required
0.3 m to 4.9 m	1
Over 4.9 m to 9.75 m	2 (See Maximum Elevation Differences in Pipe Runs Limitation)

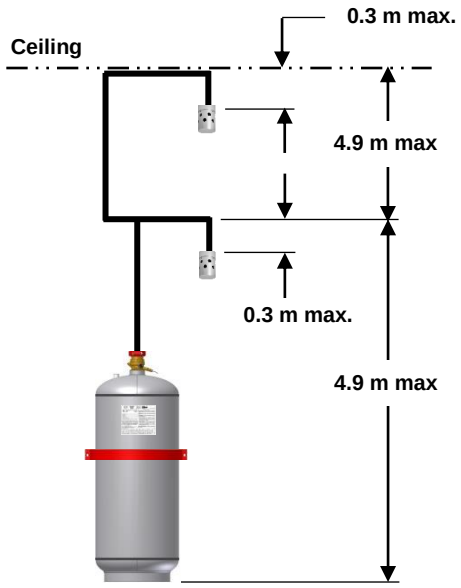

MAXIMUM ELEVATION DIFFERENCES IN PIPE RUNS LIMITATION

Nozzle(s) Location	Maximum Elevation Difference
Nozzle(s) “Only” above Container Outlet	9.1 m (See Examples 1 & 2)
Nozzle(s) “Only” below Container Outlet	9.1 m (See Examples 3)
Nozzle(s) above & below Container Outlet	9.1 m (See Examples 4)

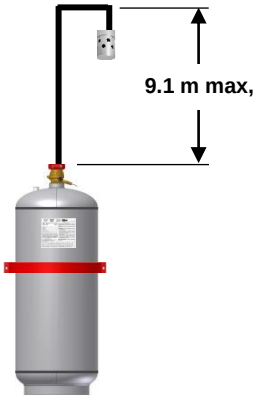

Example 1

System with a single

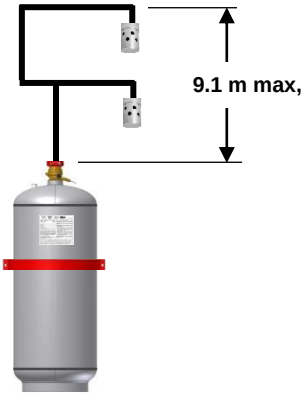

Example 2

System with

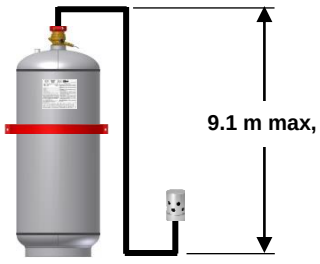

Example 3

System with a single

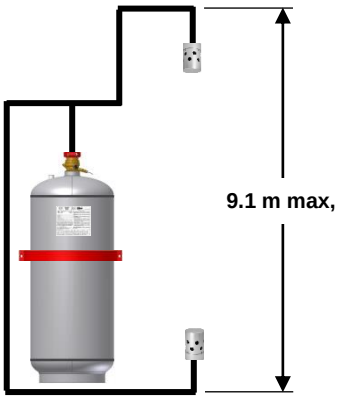

Example 4

System with levels of Nozzle(s)

While every precaution has been taken during the preparation of this document to ensure the accuracy of its content, Fike assumes no responsibility for errors or omissions. Fike reserves the right to make changes to the product or this document without notice.

NOZZLE DISCHARGE OBSTRUCTIONS

When solid obstructions (walls, partitions, equipment racks, and tall equipment) interfere with the nozzle discharge path, they should be treated as separate areas. All nozzles should be located in a manner that will provide a clear discharge path that reaches all of the outer extremes for the protected space.

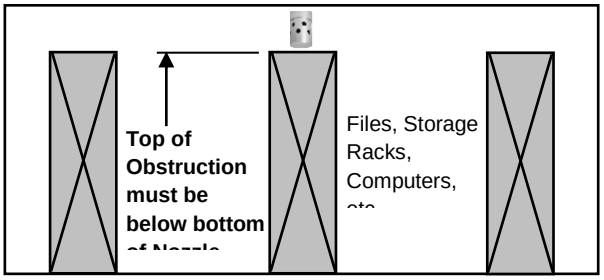

(Side View)

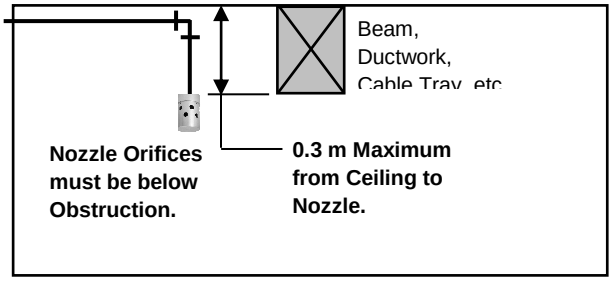

TEE SPLIT RATIOS

Type of Tee	Major-Flow Outlet		Minor-Flow Outlet	
	Minimum	Maximum	Minimum	Maximum
Bullhead	50%	75%	25%	50%
Side-Thru	65%	90%	10%	35%

TEE CONFIGURATION – BULLHEAD

Definition: Where the two-outlet branches change direction from the incoming piping inlet.

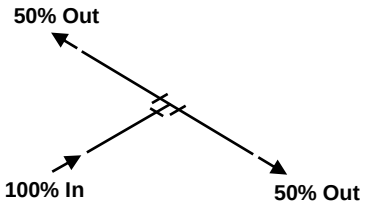

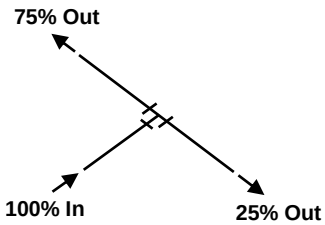

TEE CONFIGURATION – SIDE-THRU

Definition: Where one outlet branch changes direction from the inlet and the other continues straight through in the same direction as the inlet.

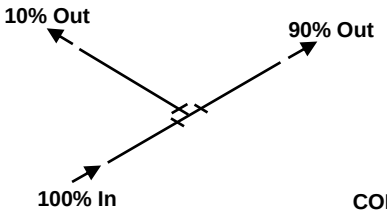

CORRECT

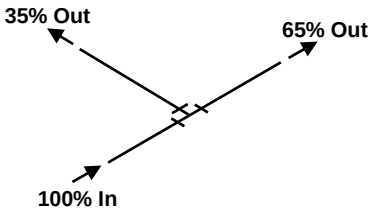

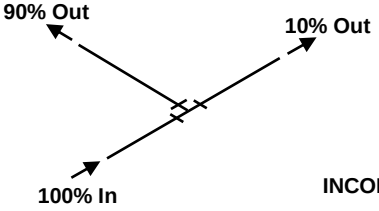

INCORRECT

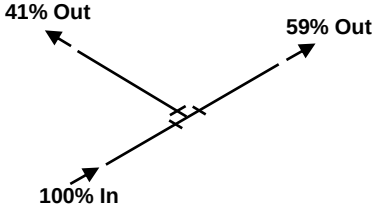

While every precaution has been taken during the preparation of this document to ensure the accuracy of its content, Fike assumes no responsibility for errors or omissions. Fike reserves the right to make changes to the product or this document without notice.

TEE ORIENTATION

I**MPORTANT NOTE:** EVERY OUTLET of every tee MUST be orientated in the horizontal plane.

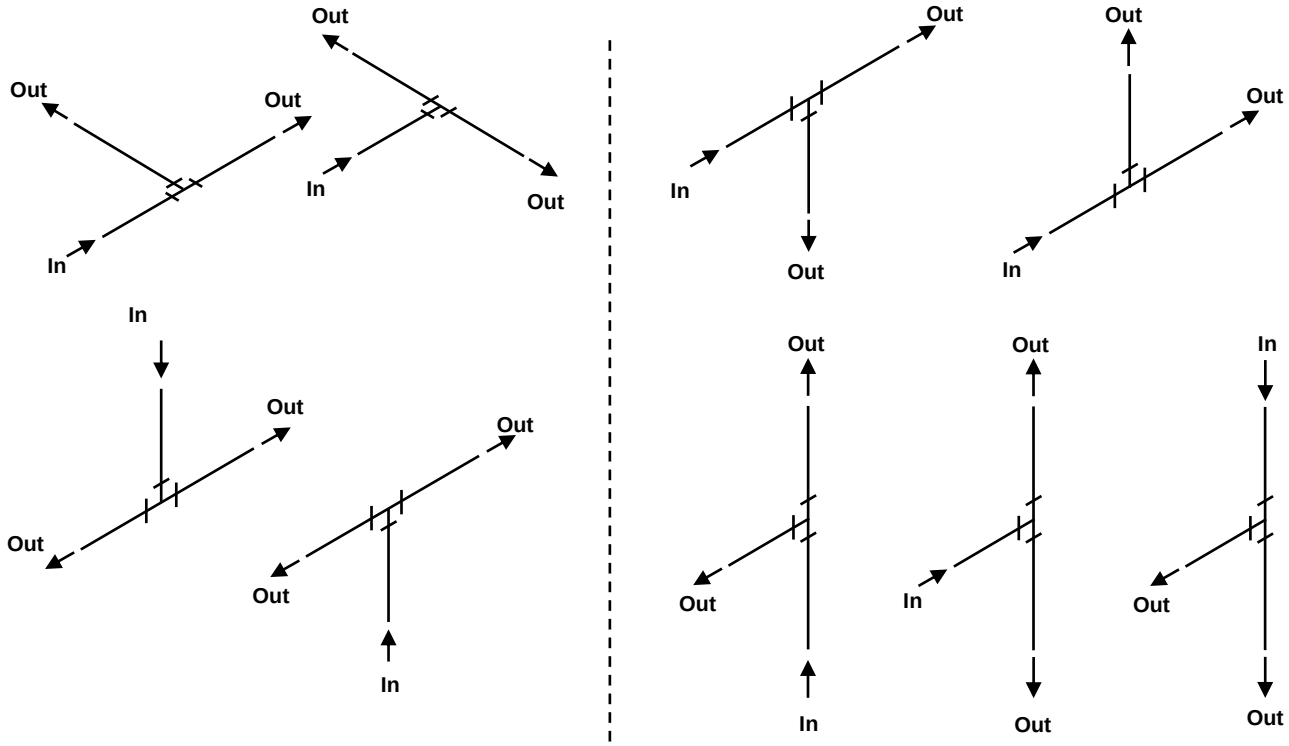

While every precaution has been taken during the preparation of this document to ensure the accuracy of its content, Fike assumes no responsibility for errors or omissions. Fike reserves the right to make changes to the product or this document without notice.

ESTIMATING PIPE SIZE

Factor	Definition	
Minimum Flow Rate	A two phase flow (liquid and vapor) that creates a turbulent flow effect forming a homogenous mixture of liquid and vapor. If the pipe size is too large, phase separation will occur and the flow cannot be predicted.	
Pipe Size (mm)	**Minimum Design Flow Rate** (kg/sec) **(System Limitation)**	**Maximum Design Flow Rate** (kg/sec) **(Estimate)**
10	0.3	0.9
15	0.5	1.5
20	0.9	2.7
25	1.5	3.9
32	2.6	5.9
40	3.8	8.9
50	5.9	15.0
65	8.9	26.3
80	15.0	43.1
100	26.3	57.6
150	57.6	144.2

NOTE: To determine the flow rate of a pipe section, divide the amount of agent flowing through that section by the discharge time (10 seconds).

MINIMUM PIPING DISTANCE

A minimum of ten (10) pipe diameters must be maintained between fittings to stabilize the flow and maintain the accuracy of the splits occurring at the tees.
The (10) pipe diameter rule applies to the following configurations:
Configuration 1: Distance from a Tee to an Elbow or Tee
Configuration 2: Distance from an Elbow to a Tee

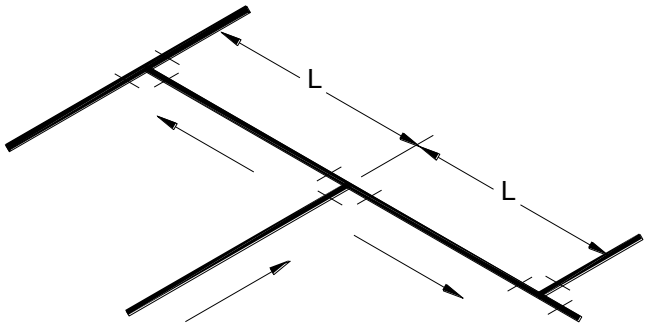

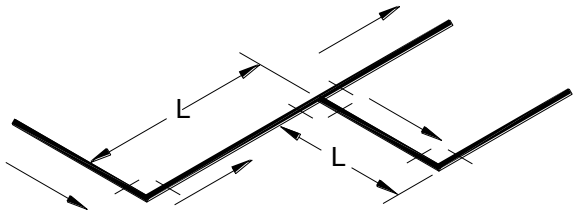

While every precaution has been taken during the preparation of this document to ensure the accuracy of its content, Fike assumes no responsibility for errors or omissions. Fike reserves the right to make changes to the product or this document without notice.

10 PIPE DIAMETERS VS. PIPE SIZE	
Pipe Size	**Minimum Length**
10 mm	102 mm
15 mm	127 mm
20 mm	204 mm
25 mm	254 mm
32 mm	305 mm
40 mm	381 mm
50 mm	508 mm
65 mm	635 mm
80 mm	762 mm
100 mm	1016 mm
150 mm	1524 mm

NOTE: The ten (10) pipe diameter rule does **not** apply:

- between an Elbow and another Elbow.
- when using back-to-back 180º nozzles as long as:
  1) Agent supplied and flow rate from both nozzles are the same.
  2) Pipe size from tee to both nozzles is the same.
  3) Pipe lengths from tee to each nozzle are within 10% of each other.

EQUIVALENT LENGTH VALUES (Schedule 40 pipe)

Pipe Size (mm)	**Union** (m)	**45° Elbow** (m)	**90° Elbow** (m)	**Thru Tee** (m)	**Side Tee** (m)	**Check Valve** (m)
10	0.09	0.18	0.40	0.24	0.82	- - -
15	0.12	0.24	0.52	0.30	1.04	- - -
20	0.15	0.30	0.67	0.43	1.37	- - -
25	0.18	0.40	0.85	0.55	1.74	0.61
32	0.24	0.52	1.13	0.70	2.29	- - -
40	0.27	0.61	1.31	0.82	2.65	- - -
50	0.37	0.79	1.68	1.07	3.41	1.22
65	0.43	0.94	2.01	1.25	4.08	- - -
80	0.55	1.16	2.50	1.55	5.06	1.37
100	0.73	1.52	3.26	2.04	6.64	- - -
150	1.07	2.32	4.94	3.08	10.0	- - -
Impulse Valve Size		1”		3”		
Equivalent Length		1.84 m		9.42 m		

While every precaution has been taken during the preparation of this document to ensure the accuracy of its content, Fike assumes no responsibility for errors or omissions. Fike reserves the right to make changes to the product or this document without notice.

PIPE NETWORK LIMITATIONS (Verified by the Fike Flow Calculation Program)

Description of Limit	Definition	Limitation
Percent of Agent in Pipe	The total agent weight (liquid) that may reside in the piping network during discharge.	**70%** maximum
Location of 1st Tee	The distance from the cylinder to the first tee of the piping system.	1 – Percent of agent in pipe network = 39% or less: No Restriction applies to the location of the 1st tee.
		2 – Percent of agent in pipe network = 40% or higher: 1st tee must be located a minimum of 10% to 30% away from the container See Figure 1 for details

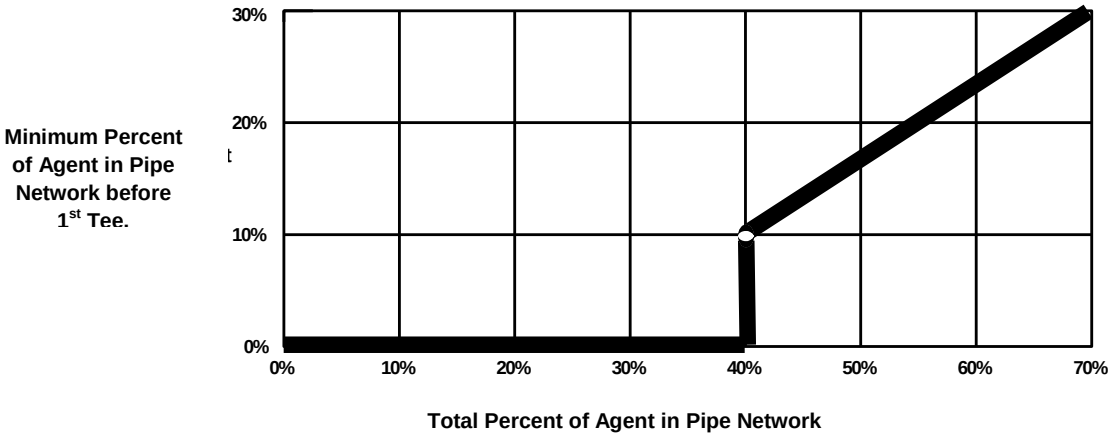

Liquid Arrival Time	The time necessary for liquid agent to arrive at each nozzle.	Liquid agent must "Arrive" at each nozzle within **1 second** of each other. (See Example 5)

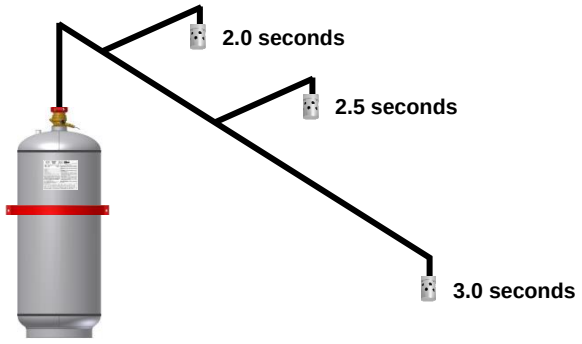

Example 5:

If liquid agent takes 2.0 seconds to arrive at the 1st nozzle, (the closest nozzle to the container); liquid arrival time for remaining nozzles cannot exceed 1 second.

While every precaution has been taken during the preparation of this document to ensure the accuracy of its content, Fike assumes no responsibility for errors or omissions. Fike reserves the right to make changes to the product or this document without notice.

Liquid Runout Time	The time necessary for the liquid agent to discharge (runout) of each nozzle.	Each nozzle must "Runout" within **2.1 seconds** of each other. (See Example 6)

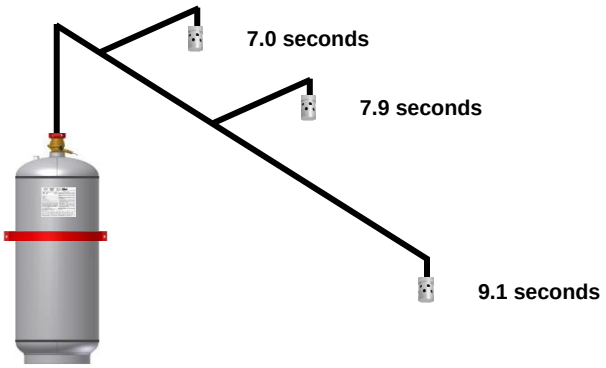

Example 6:

If liquid runout time for the 1st nozzle takes 7.0 seconds, the runout time for remaining nozzles must not exceed 9.1 seconds**.**

NOZZLE ORIFICE AREA LIMITATION – 180° & 360°

Minimum Orifice Area	Maximum Orifice Area	Minimum Pressure
20% – Pipe cross sectional area	80% – Pipe cross sectional area	3.8 bar

CAUTION: It is important to use pipe & fittings that are approved (for details, refer to the Pipe and Fittings component sheet (p/n 06-495) and not to exceed system limitations in a clean agent fire suppression system design, failure to do so may cause the system not to supply the quantity of extinguishing agent required to suppress the fire.

MANIFOLD OPTIONS

Configurations	Notes
Center Exit Manifold	Used for multiple container applications. Check Valves are required for **EACH** container being connected to a manifold. Every container must be the same type, same size, and identical fill weight. Refer to Check Valve Component sheet (p/n 06-497) for installation information.
End Exit Manifold	
Center Exit Manifold / Main and Reserve	
End Exit Manifold / Main and Reserve	

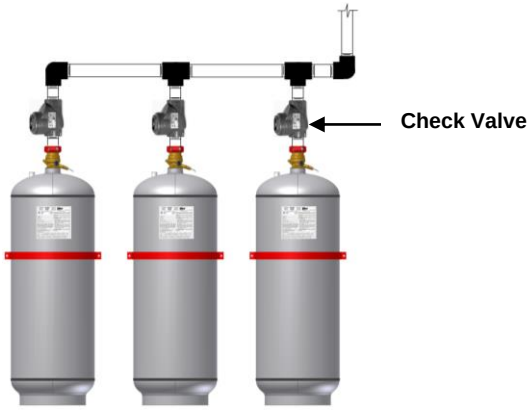

Typical End Exit Manifold

While every precaution has been taken during the preparation of this document to ensure the accuracy of its content, Fike assumes no responsibility for errors or omissions. Fike reserves the right to make changes to the product or this document without notice.

SAMPLE PROBLEM

The following is a Fike Clear Agent Fire Suppression system designed within the limitations established by Fike's UL listing and FM approval, and in compliance with NFPA 2001 using Fike Flow Calculation Program reflecting the inputs required and showing the computer program output information.

HAZARD INFORMATION

Design Concentration: 6.25% (Minimum)

Temperature Range: 20° C. to 29° C.

Enclosure Elevation: 0 Feet (Sea Level)

Room Height: 2.5 m

Unclosable Openings: None

No. of Nozzles:

- Control Room: 2 - 360° Nozzles
- Office / Storage Room: 1 - 180° Nozzles

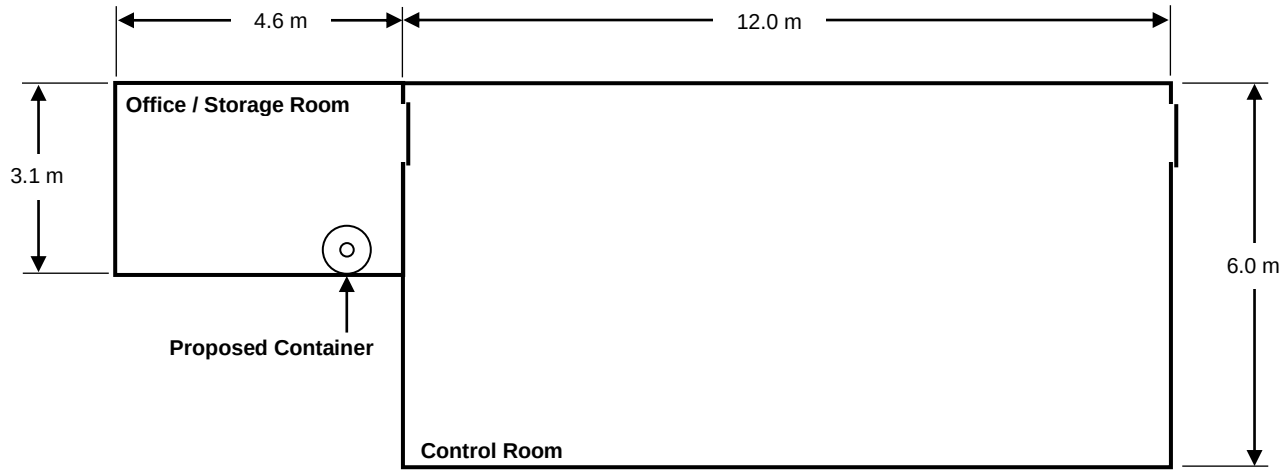

FIGURE 1 – Floor Plan

While every precaution has been taken during the preparation of this document to ensure the accuracy of its content, Fike assumes no responsibility for errors or omissions. Fike reserves the right to make changes to the product or this document without notice.

INPUTS – FIKE FLOW CALCULATION PROGRAM

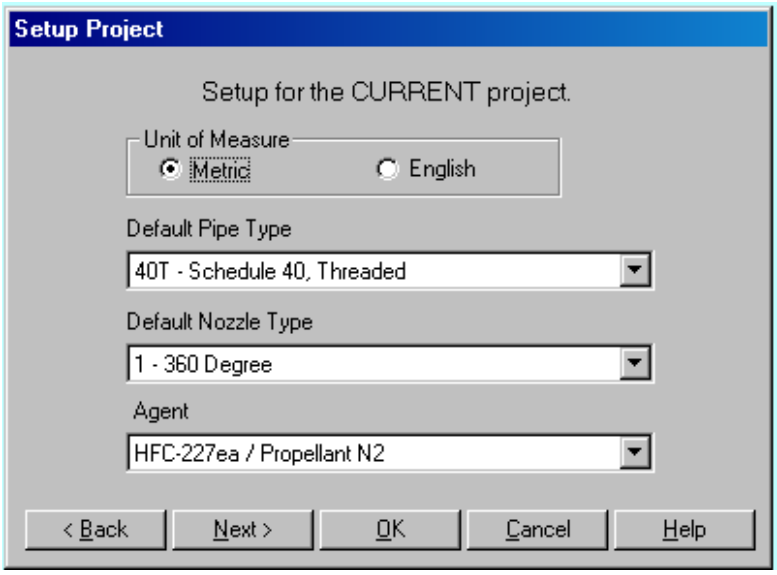

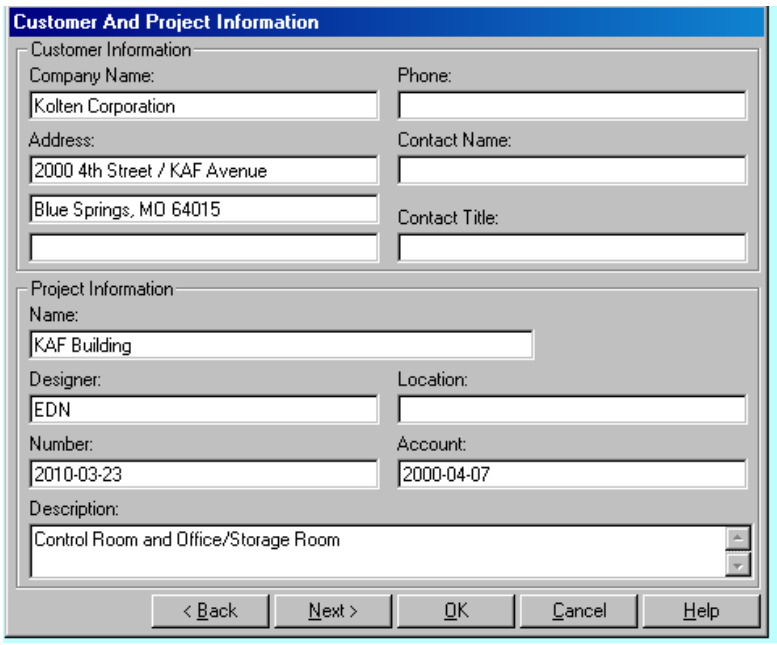

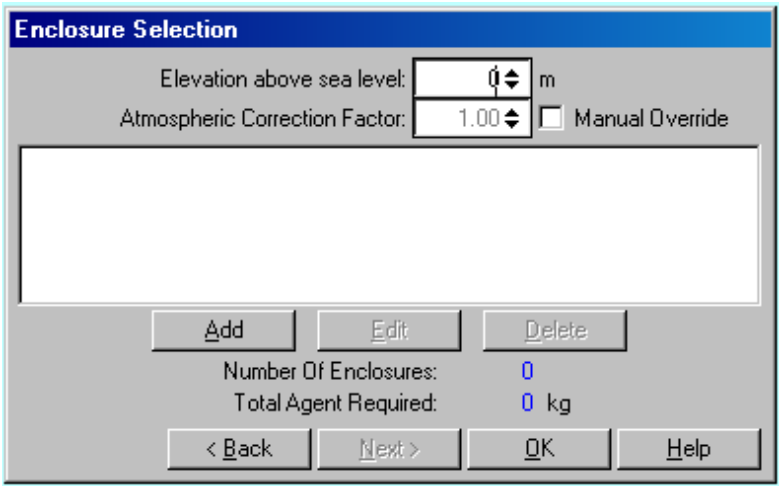

While every precaution has been taken during the preparation of this document to ensure the accuracy of its content, Fike assumes no responsibility for errors or omissions. Fike reserves the right to make changes to the product or this document without notice.

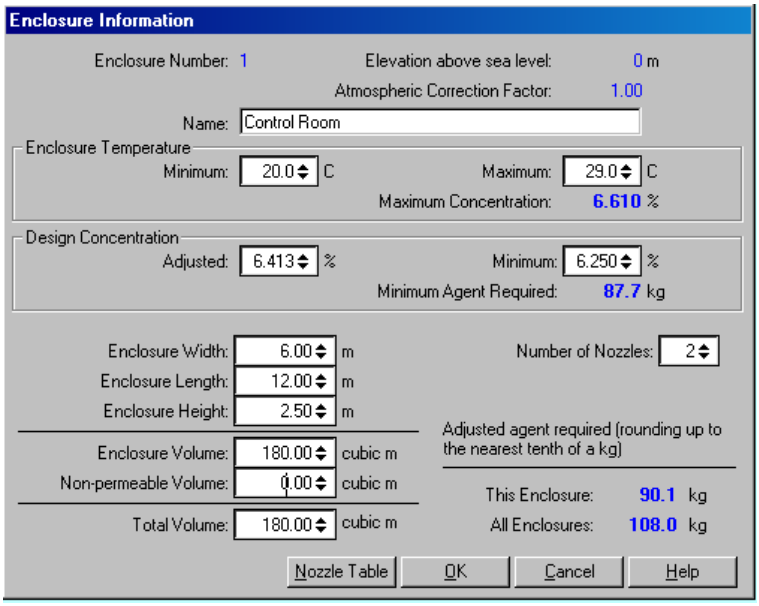

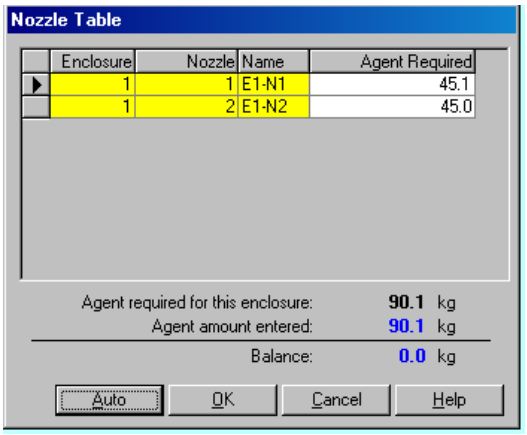

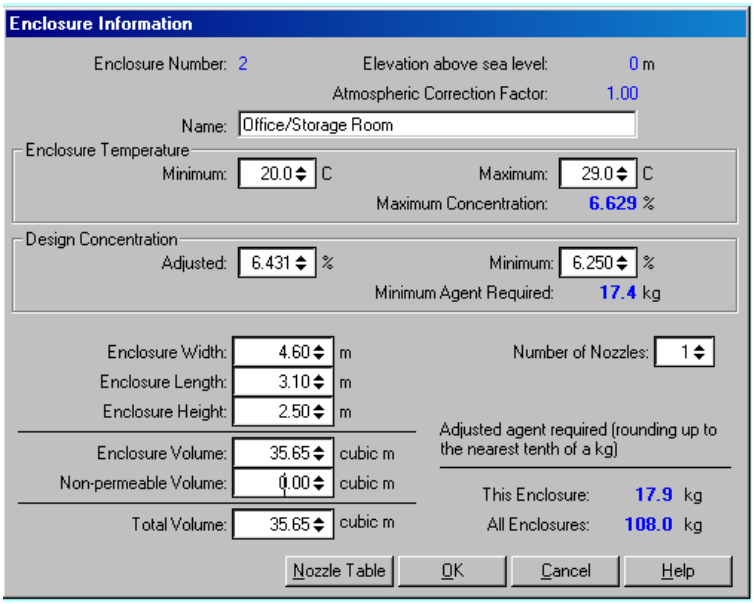

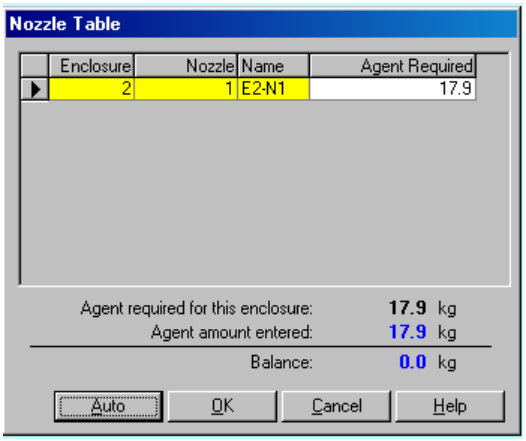

While every precaution has been taken during the preparation of this document to ensure the accuracy of its content, Fike assumes no responsibility for errors or omissions. Fike reserves the right to make changes to the product or this document without notice.

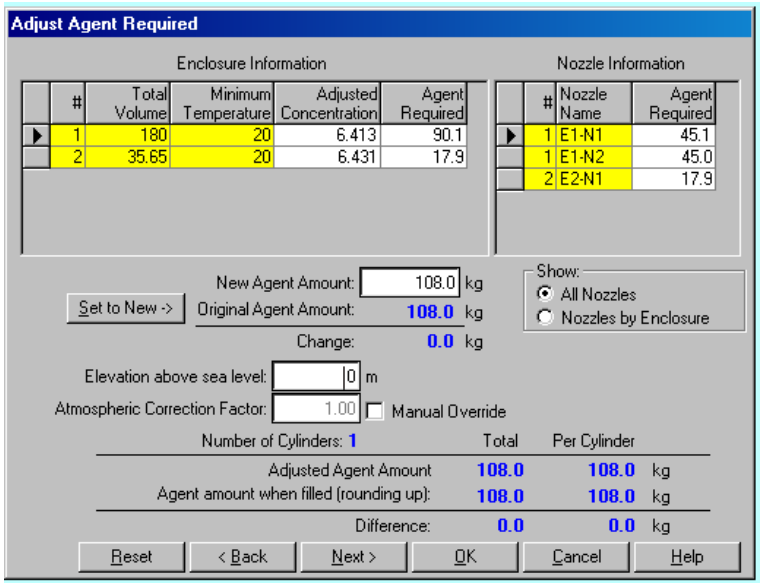

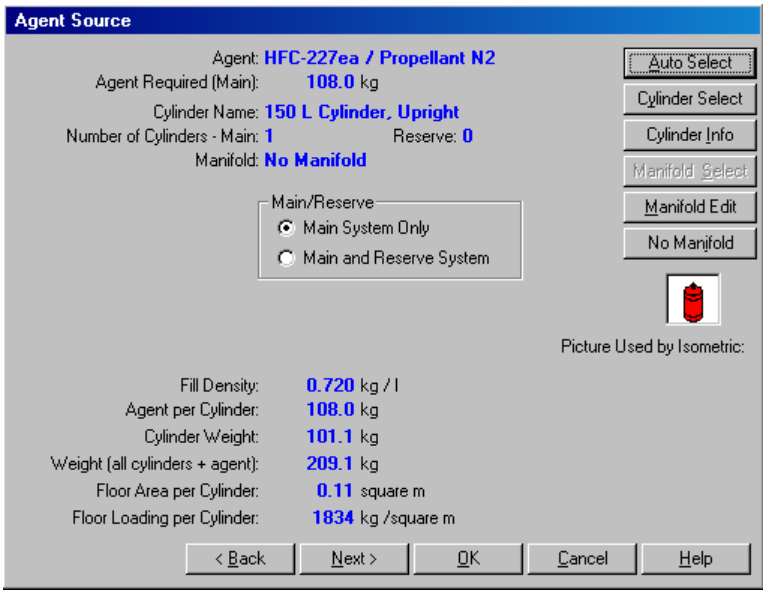

While every precaution has been taken during the preparation of this document to ensure the accuracy of its content, Fike assumes no responsibility for errors or omissions. Fike reserves the right to make changes to the product or this document without notice.

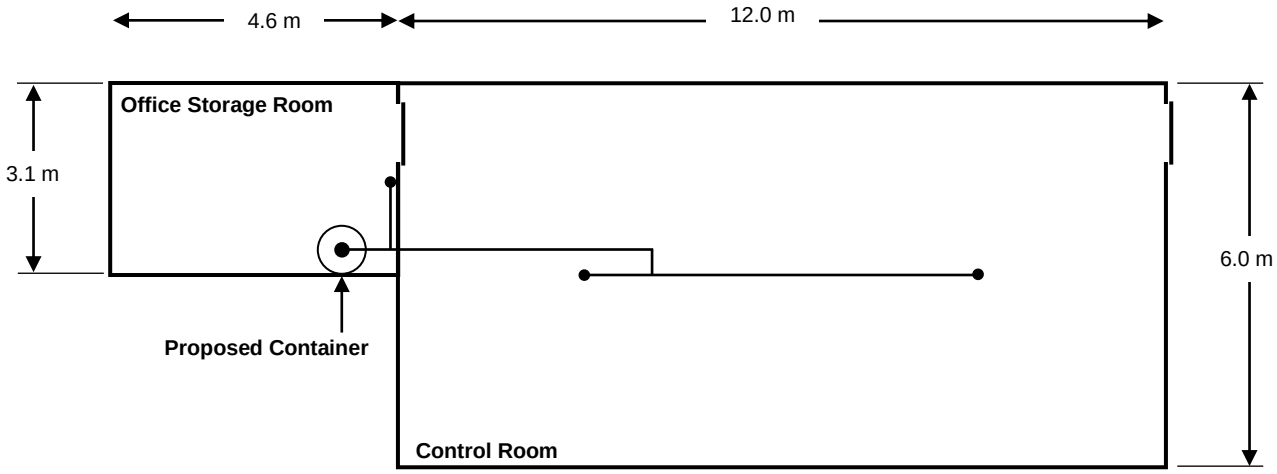

FIGURE 2 – Pipe and Nozzle Layout

Fike HFC-227ea FlowCalc FIK3.02 - SampleProblem-Metric.FLC - [Pipe Network]

File Edit Input Calculate Reports Tables Window Help

Def. D. | Dup. T. | Dup. D. | Test | < Back | OK

☑ Desc. ☑ PipeType ☑ 45 ☑ Union ☑ Other ☑ E.L. ☑ Flow,Nozzle

Description	Start	End	Type	Diameter	Lock Pipe	Length	Elev.	90	45	Thru	Side	Union	Others	EL Added	EL Total	Flow	Nozzle	Nozzle Type	Nozzle Area
Main Cyl. X 1	0	1		80 mm	Yes	1.54	1.54							0.00	9.42	108.0			
Pipe	1	2	40T	32 mm	No	1.30	1.30							0.00	1.31	108.0			
Pipe	2	3	40T	32 mm	No	1.00	0.00	1						0.00	2.13	108.0			
Pipe	3	4	40T	32 mm	No	4.00	0.00			1				0.00	4.69	90.1			
Pipe	4	5	40T	32 mm	No	0.60	0.00	1						0.00	1.74	90.1			
Pipe	5	6	40T	32 mm	No	5.00	0.00				1			0.00	7.28	45.0			
Pipe/E1-N2	6	7	40T	32 mm	No	0.20	-0.20	1						0.00	1.34	45.0	E1-N2	360 Degree	380.00
Pipe	5	8	40T	32 mm	No	1.00	0.00				1			0.00	3.29	45.1			
Pipe/E1-N1	8	9	40T	32 mm	No	0.20	-0.20	1						0.00	1.34	45.1	E1-N1	360 Degree	367.94
Pipe	3	10	40T	20 mm	No	1.00	0.00				1			0.00	2.38	17.9			
Pipe/E2-N1	10	11	40T	20 mm	No	0.20	-0.20	1						0.00	0.88	17.9	E2-N1	180 Degree	136.00

While every precaution has been taken during the preparation of this document to ensure the accuracy of its content, Fike assumes no responsibility for errors or omissions. Fike reserves the right to make changes to the product or this document without notice.



EDN

Fike Corporation
Phone: 816-655-4743
Fike HFC-227ea FlowCalc FIK3.02
UL: EX4623 FM: OY4A8.AF
Project: KAF Building
File Name: SampleProblem-Metric.FLC

Consolidated Report

Customer Information

Company Name: Kolten Corporation
Address: 2000 4th Street / KAF Avenue
Blue Springs, MO 64015

Phone:
Contact:
Title:

Project Data

Project Name: KAF Building
Designer: EDN
Number: 2010-03-23
Account: 2000-04-07
Location:
Description: Control Room and Office/Storage Room

Calculation Date/Time: Tuesday, March 23, 2010, 3:25:43 PM
Copyright (c) Hughes Associates, Inc. Licensed to: Fike Protection Systems

While every precaution has been taken during the preparation of this document to ensure the accuracy of its content, Fike assumes no responsibility for errors or omissions. Fike reserves the right to make changes to the product or this document without notice.

Fike

Consolidated Report
Enclosure Information

Elevation:	0 m (relative to sea level)
Atmospheric Correction Factor:	1

Enclosure Number:	1
Name:	Control Room
Enclosure Temperature...	
Minimum:	20.0 C
Maximum:	29.0 C
Maximum Concentration:	6.610 %
Design Concentration...	
Adjusted:	6.413 %
Minimum:	6.250 %
Minimum Agent Required:	87.7 kg
Width:	6.00 m
Length:	12.00 m
Height:	2.50 m
Volume:	180.00 cubic m
Non-permeable:	0.00 cubic m
Total Volume:	180.00 cubic m
Adjusted Agent Required:	90.1 kg
Number of Nozzles:	2

Calculation Date/Time: Tuesday, March 23, 2010, 3:25:43 PM
Copyright (c) Hughes Associates, Inc. Licensed to: Fike Protection Systems

While every precaution has been taken during the preparation of this document to ensure the accuracy of its content, Fike assumes no responsibility for errors or omissions. Fike reserves the right to make changes to the product or this document without notice.

Fike

Consolidated Report
Enclosure Information

Elevation:	0 m (relative to sea level)
Atmospheric Correction Factor:	1
Enclosure Number:	2
Name:	Office/Storage Room
Enclosure Temperature...	
Minimum:	20.0 C
Maximum:	29.0 C
Maximum Concentration:	6.629 %
Design Concentration...	
Adjusted:	6.431 %
Minimum:	6.250 %
Minimum Agent Required:	17.4 kg
Width:	4.60 m
Length:	3.10 m
Height:	2.50 m
Volume:	35.65 cubic m
Non-permeable:	0.00 cubic m
Total Volume:	35.65 cubic m
Adjusted Agent Required:	17.9 kg
Number of Nozzles:	1

Calculation Date/Time: Tuesday, March 23, 2010, 3:25:43 PM
Copyright (c) Hughes Associates, Inc. Licensed to: Fike Protection Systems

While every precaution has been taken during the preparation of this document to ensure the accuracy of its content, Fike assumes no responsibility for errors or omissions. Fike reserves the right to make changes to the product or this document without notice.

Fike

Consolidated Report
Agent Information

Agent: HFC-227ea / Propellant N2

Adjusted Agent Required:	108.0 kg
Cylinder Name:	150 L Cylinder, Upright
Cylinder Part Number:	70-257
Number of Main Cylinders:	1
Number of Reserve Cylinders:	0
Manifold:	No Manifold
Pipe Take Off Direction:	Up
Agent Per Cylinder:	108.0 kg
Fill Density:	0.720 kg / l
Cylinder Empty Weight:	101.1 kg
Weight, All Cylinders + Agent:	209.1 kg
Floor Area Per Cylinder:	0.11 square m
Floor Loading Per Cylinder:	1834 kg /square m

Pipe Network

Part 1 - Pipe

			Pipe			
Description	Start	End	Type	Diameter	Length	Elevation
Main Cyl. X 1	0	1		80 mm	1.54 m	1.54 m
Pipe	1	2	40T	32 mm	1.30 m	1.30 m
Pipe	2	3	40T	32 mm	1.00 m	0.00 m
Pipe	3	4	40T	32 mm	4.00 m	0.00 m
Pipe	4	5	40T	32 mm	0.60 m	0.00 m
Pipe	5	6	40T	32 mm	5.00 m	0.00 m
Pipe/E1-N2	6	7	40T	32 mm	0.20 m	-0.20 m
Pipe	5	8	40T	32 mm	1.00 m	0.00 m
Pipe/E1-N1	8	9	40T	32 mm	0.20 m	-0.20 m
Pipe	3	10	40T	20 mm	1.00 m	0.00 m
Pipe/E2-N1	10	11	40T	20 mm	0.20 m	-0.20 m

Calculation Date/Time: Tuesday, March 23, 2010, 3:25:43 PM
Copyright (c) Hughes Associates, Inc. Licensed to: Fike Protection Systems

While every precaution has been taken during the preparation of this document to ensure the accuracy of its content, Fike assumes no responsibility for errors or omissions. Fike reserves the right to make changes to the product or this document without notice.

Part 2 - Equivalent Length

Start	End	90	45	Thru	Side	Union	Other	Added	Total
0	1	0	0	0	0	0		0.00 m	9.42 m
1	2	0	0	0	0	0		0.00 m	1.31 m
2	3	1	0	0	0	0		0.00 m	2.13 m
3	4	0	0	1	0	0		0.00 m	4.69 m
4	5	1	0	0	0	0		0.00 m	1.74 m
5	6	0	0	0	1	0		0.00 m	7.28 m
6	7	1	0	0	0	0		0.00 m	1.34 m
5	8	0	0	0	1	0		0.00 m	3.29 m
8	9	1	0	0	0	0		0.00 m	1.34 m
3	10	0	0	0	1	0		0.00 m	2.38 m
10	11	1	0	0	0	0		0.00 m	0.88 m

Part 3 - Nozzles

Start	End	Flow	Name	Size	Type	Nozzle Area
0	1	108.0 kg				
1	2	108.0 kg				
2	3	108.0 kg				
3	4	90.1 kg				
4	5	90.1 kg				
5	6	45.0 kg				
6	7	45.0 kg	E1-N2	32 mm	360 Degree	380.00 square mm
5	8	45.1 kg				
8	9	45.1 kg	E1-N1	32 mm	360 Degree	367.94 square mm
3	10	17.9 kg				
10	11	17.9 kg	E2-N1	20 mm	180 Degree	136.00 square mm

Parts Information

Total Agent Required: 108.0 kg
Cylinder Name: 150 L Cylinder, Upright (Part: 70-257)
Number Of Cylinders: 1
Field1

Calculation Date/Time: Tuesday, March 23, 2010, 3:25:43 PM
Copyright (c) Hughes Associates, Inc. Licensed to: Fike Protection Systems

While every precaution has been taken during the preparation of this document to ensure the accuracy of its content, Fike assumes no responsibility for errors or omissions. Fike reserves the right to make changes to the product or this document without notice.

Fike

Consolidated Report

Nozzle	Type	Diameter	Nozzle Area	Part Number
E1-N1	360 Degree	32 mm	367.94 square mm	80-056-2460
E1-N2	360 Degree	32 mm	380.00 square mm	80-056-2500
E2-N1	180 Degree	20 mm	136.00 square mm	80-062-1562

Nozzle	Drill Diameter	Drill Size
E1-N1	6.2484 mm	D
E1-N2	6.3500 mm	1/4
E2-N1	3.9675 mm	5/32

Pipe:	Type	Diameter	Length
	40T	20 mm	1.20 m
	40T	32 mm	13.30 m

List of 90 degree elbows:
1 - 20 mm
4 - 32 mm

List of Tees:
2 - 32 mm

System Acceptance

System Discharge Time:	8.7 seconds
Percent Agent In Pipe:	17.2%
Percent Agent Before First Tee:	2.9%
Enclosure Number:	1
Enclosure Name:	Control Room
Minimum Design Concentration:	6.250%
Adjusted Design Concentration:	6.413%
Predicted Concentration:	6.437%
Maximum Expected Agent Concentration:	6.635% (At 29.0 C)

Calculation Date/Time: Tuesday, March 23, 2010, 3:25:43 PM
Copyright (c) Hughes Associates, Inc. Licensed to: Fike Protection Systems

While every precaution has been taken during the preparation of this document to ensure the accuracy of its content, Fike assumes no responsibility for errors or omissions. Fike reserves the right to make changes to the product or this document without notice.

Fike

Consolidated Report

Nozzle	Minimum Agent Required	Adjusted Agent Required	Predicted Agent Delivered	Nozzle Pressure (Average)
E1-N1	43.9 kg	45.1 kg	45.2 kg	9.092 bar
E1-N2	43.8 kg	45.0 kg	45.3 kg	8.489 bar

Enclosure Number: 2
Enclosure Name: Office/Storage Room

Minimum Design Concentration: 6.250%
Adjusted Design Concentration: 6.431%
Predicted Concentration: 6.310%
Maximum Expected Agent Concentration: 6.504% (At 29.0 C)

Nozzle	Minimum Agent Required	Adjusted Agent Required	Predicted Agent Delivered	Nozzle Pressure (Average)
E2-N1	17.4 kg	17.9 kg	17.5 kg	11.791 bar

Drawing View: 1

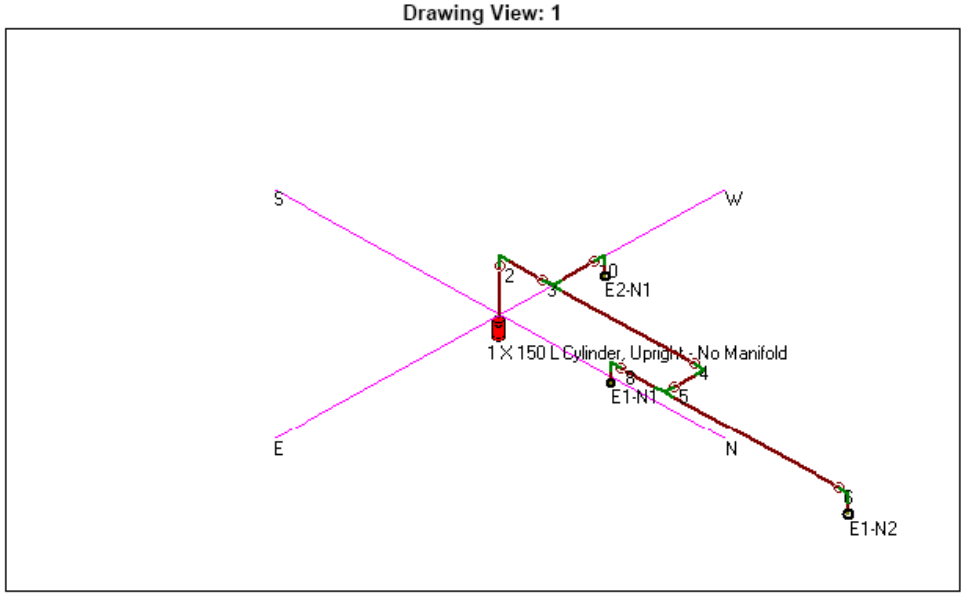

Page: 7 of 7
Calculation Date/Time: Tuesday, March 23, 2010, 3:25:43 PM
Copyright (c) Hughes Associates, Inc. Licensed to: Fike Protection Systems

While every precaution has been taken during the preparation of this document to ensure the accuracy of its content, Fike assumes no responsibility for errors or omissions. Fike reserves the right to make changes to the product or this document without notice.

PRE-ENGINEERED PIPING LIMITATIONS

The following information details the steps necessary to design a pre-engineered piping network for a Fike HFC-227ea Clean Agent Fire Suppression System within the limitations established by Fike's UL / ULC listing (UL Ex4623) and FM approval (FM 3014476).

Pipe sizes have been pre-determined based on container size and the number of nozzles needed. Refer to one of the following tables:

- Table 1 – HFC-227ea Pre-Engineered Pipe Network Limitations – 1 Nozzle Systems
- Table 2 – HFC-227ea Pre-Engineered Pipe Network Limitations – 2 Nozzle Systems

The Pre-Engineered concept minimizes the engineering effort required to design an effective system. As long as nozzle selection, pipe size and pipe length limitations are adhered to, hydraulic flow calculations are not required.

The designer will need to perform a simple hand calculation to determine the following:

For 1 Nozzle Systems:

Determine the length of pipe and the number of elbows from the container to the nozzle, if pipe length and number of elbows is equal to or less than values for the container and pipe size being used, the pipe network is acceptable.

For 2 Nozzle Systems:

When designing a two nozzle Pre-Engineered System, the nozzle and piping layout **MUST** be installed in a balanced configuration. To accomplish this, the flow path from the container to each nozzle must be the same length, using the same pipe sizes, the same quantity and type of fittings, and the nozzles must discharge the same amount of agent from each nozzle. A piping network is considered to be balanced if the total length from the container to each nozzle is within 10% of each other.

In addition, all tee splits **MUST** be made using a Bullhead Tee configuration, and each outlet must be oriented in the horizontal plane.

While every precaution has been taken during the preparation of this document to ensure the accuracy of its content, Fike assumes no responsibility for errors or omissions. Fike reserves the right to make changes to the product or this document without notice.

NOZZLE TYPES – PRE-ENGINEERED

The 180° and 360° nozzles can be used on a pre-engineered Fike HFC-227ea Clean Agent Fire Suppression System: For design limitations for the 180° and 360° Nozzles, refer to pages 7 and 8.

PIPING NETWORK LIMITATIONS – SINGLE NOZZLE SYSTEMS

TABLE 1 – HFC-227ea Pre-Engineered Pipe Network Limitations – Single Nozzle Systems						
Container Size	**Pipe Size**	**Maximum Pipe Length** Meters	**Elbows included in Maximum Pipe Length**	**Deduct for each additional Elbow over 8**	**Nozzle Type**	
					360° Nozzle	**180° Nozzle**
5L	10	13.7	8	0.4	84-045-030	84-052-032
9L	15	10.6	8	0.5	84-046-040	84-053-042
16L	20	13.7	8	0.7	84-047-053	84-054-056
26L	25	13.7	8	0.8	84-048-067	84-055-071
45L	40	18.3	8	1.3	84-050-076	84-057-080

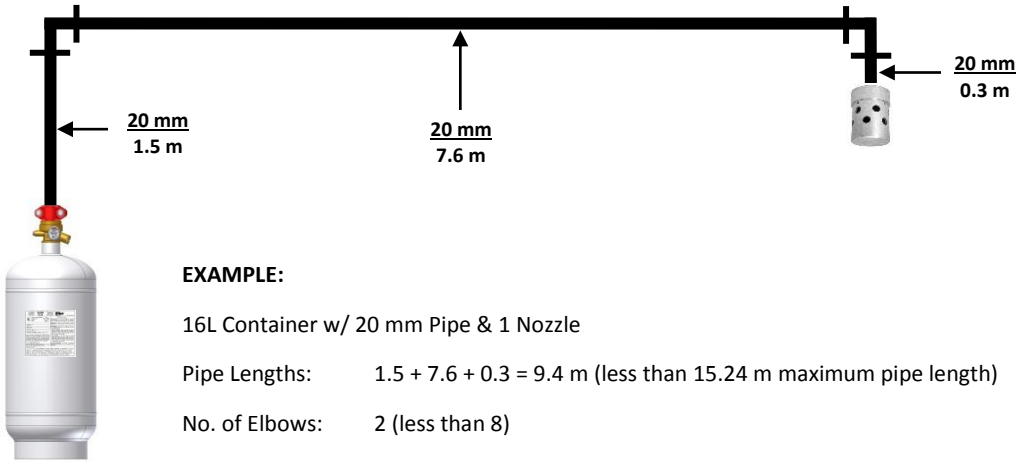

EXAMPLE:

16L Container w/ 20 mm Pipe & 1 Nozzle

Pipe Lengths: 1.5 + 7.6 + 0.3 = 9.4 m (less than 15.24 m maximum pipe length)

No. of Elbows: 2 (less than 8)

(Pipe Network is "Acceptable")

While every precaution has been taken during the preparation of this document to ensure the accuracy of its content, Fike assumes no responsibility for errors or omissions. Fike reserves the right to make changes to the product or this document without notice.

PIPING NETWORK LIMITATIONS – TWO NOZZLE SYSTEMS

TABLE 2 – HFC--227ea Pre-Engineered Pipe Network Limitations – Two Nozzle Systems							
Container Size	**Total Pressure Drop** (TPD)	**Section A**		**Section B** (see Note 1)		**Nozzle Type**	
		Pipe Size	**Deduct for each Elbow over 6**	**Pipe Size**	**Deduct for each Elbow over 4**	**360° Nozzle**	**180° Nozzle**
5L	7	10	0.4	10	0.4	84-045-017	84-052-017
9L	11	15	0.5	10	0.4	84-045-031	84-052-032
16L	14	20	0.7	15	0.5	84-046-040	84-053-042
26L	14	25	0.8	20	0.7	84-047-053	84-054-056
45L	18.3	40	1.3	25	0.8	84-048-067	84-055-071

1) Maximum actual pipe length of **each** Section B branch line is as follows:
   9, 16, 26 & 45L systems = 9.75
   5L system = 4.87

EXAMPLE:

16L. Container w/ 20 m Pipe (Section A) & 15 m Pipe (Section B w/ 2 Nozzles)

Actual Pipe Lengths + (No. of Elbows x Equivalent Length) = TPD per Section

(Section A) (1.2 + 3.0 + 0.6 + 3.9) 8.7 + (3 elbows[1]) 0 = 8.7
(Section B) (4.4 + 0.2) 4.6 ft. + (1 elbow[2]) 0 = 4.6

Total TPD = 13.3 (less than 14 maximum TPD)
(Pipe network is "Acceptable")

[1] The 3 elbows in Section A is less than 6 therefore no pressure drop compensation required

[2] The 1 elbow in Section B is less than 4 therefore no pressure drop compensation required

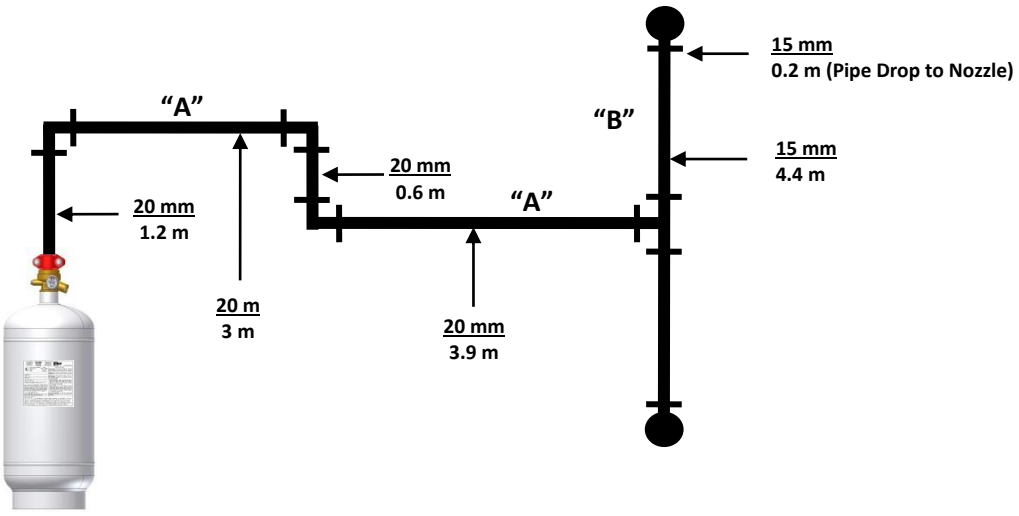

While every precaution has been taken during the preparation of this document to ensure the accuracy of its content, Fike assumes no responsibility for errors or omissions. Fike reserves the right to make changes to the product or this document without notice.

CLEAN AGENT
FIRE SUPPRESSION SYSTEM

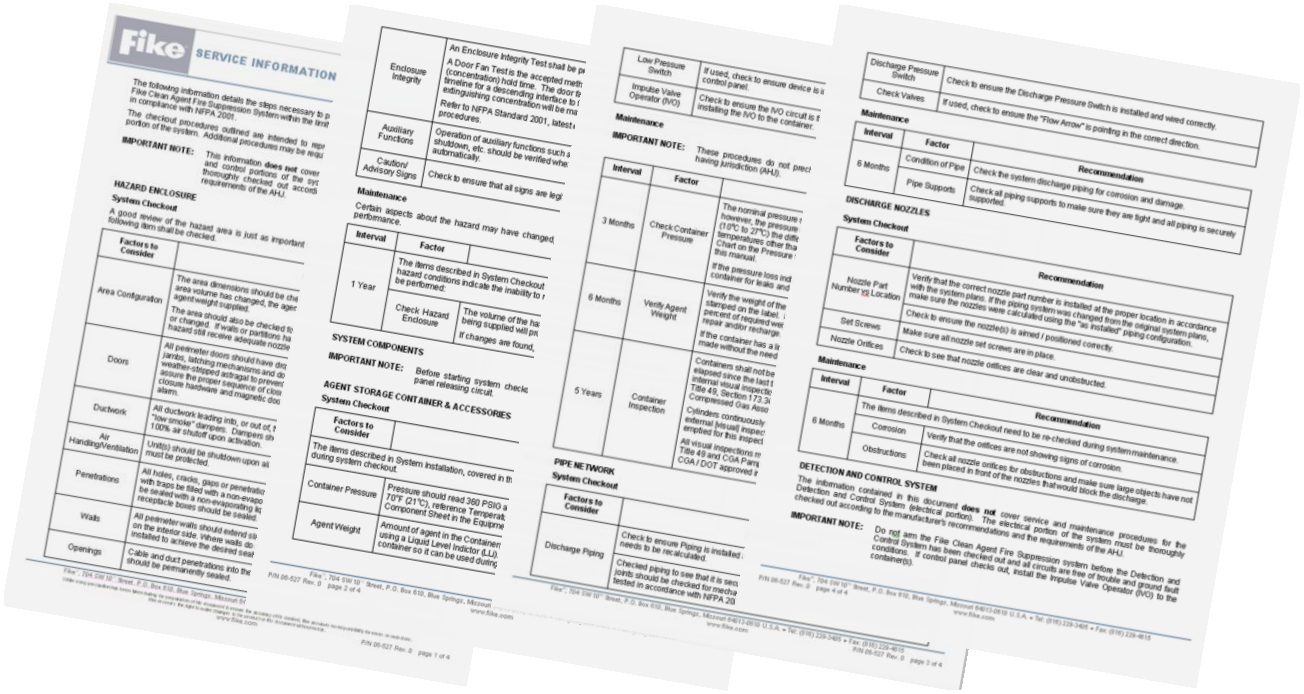

SYSTEM CHECKOUT / MAINTENANCE

While every precaution has been taken during the preparation of this document to ensure the accuracy of its content, Fike assumes no responsibility for errors or omissions. Fike reserves the right to make changes to the product or this document without notice.

The following information details the steps necessary to perform system checkout and periodic maintenance on a Fike Clean Agent Fire Suppression System within the limitations established by Fike's UL listing, FM approval and in compliance with NFPA 2001, ISO 14520 and/or EN 15004.

The checkout procedures outlined are intended to represent the minimum requirement for the extinguishing portion of the system. Additional procedures may be required by the Authority having Jurisdiction (AHJ)

IMPORTANT NOTE: This information **does not** cover service and maintenance procedures for the electrical and control portions of the system. The control portion of the system should be thoroughly checked out according to the manufacturer's recommendations and the requirements of the AHJ.

HAZARD ENCLOSURE

System Checkout

A good review of the hazard area is just as important as the proper operation of system components. The following item shall be checked.

Factors to Consider	Recommendation
Area Configuration	The area dimensions should be checked against those shown on the system plan(s). If the area volume has changed, the agent weight should be recalculated and compared with the agent weight supplied. The area should also be checked for walls or movable partitions, which have been added or changed. If walls or partitions have been added, check to see that all areas within the hazard still receive adequate nozzle coverage and agent distribution.
Doors	All perimeter doors should have drop seals on the bottom, weather-stripping around the jambs, latching mechanisms and door closure hardware. Double doors should have a weather-stripped astragal to prevent leakage between the doors, and a coordinator to assure the proper sequence of closure. Normally open doors shall be equipped with door closure hardware and magnetic door holders that will release the door(s) upon a system alarm.
Ductwork	All ductwork leading into, or out of, the protected space(s) should be isolated with sealed, "low smoke" dampers. Dampers should be spring-loaded or motor-operated to provide 100% air shutoff upon activation.
Air Handling/Ventilation	Unit(s) should be shutdown upon alarm, if unit(s) cannot be shutdown volume of ductwork must be protected.
Penetrations	All holes, cracks, gaps or penetrations in perimeter walls must be sealed and floor drains with traps be filled with a non-evaporating liquid. Sub-floor drains must have "P"- traps and be sealed with a non-evaporating liquid, such as anti-freeze or mineral oil. Wall switch and receptacle boxes should be sealed.
Walls	All perimeter walls should extend slab-to-slab, and each should be sealed top and bottom on the interior side. Where walls do not extend slab-to-slab, bulkheads will have to be installed to achieve the desired sealing characteristics. Porous block walls must be sealed.
Openings	Cable and duct penetrations into the area, joints where walls contact floors, or other walls should be permanently sealed.

While every precaution has been taken during the preparation of this document to ensure the accuracy of its content, Fike assumes no responsibility for errors or omissions. Fike reserves the right to make changes to the product or this document without notice.

Enclosure Integrity	An Enclosure Integrity Test shall be performed on all protected enclosures. A Door Fan Test is the accepted method to estimate worst-case room leakage and agent (concentration) hold time. The door fan calculation method makes it possible to predict the timeline for a descending interface to fall to a given height and estimate how long an extinguishing concentration will be maintained within the protected space. Refer to NFPA Standard 2001, latest edition for additional information and door fan test procedures.
Auxiliary Functions	Operation of auxiliary functions such as door closures, damper closures, air handling shutdown, etc. should be verified when the control system is activated, both manually and automatically.
Caution/ Advisory Signs	Check to ensure that all signs are legible and free of damage.

Maintenance

Certain aspects about the hazard may have changed, or been overlooked, which could affect overall system performance.

Interval	Factor	Recommendation
1 Year	The items described in System Checkout need to be re-checked during system maintenance. If hazard conditions indicate the inability to maintain agent concentration, a Door Fan Test needs to be performed:	
	Check Hazard Enclosure	The volume of the hazard enclosure(s) must be checked to determine if agent being supplied will protect the hazard properly. If changes are found, the system needs to be recalculated.

SYSTEM COMPONENTS

IMPORTANT NOTE: Before starting system checkout or system maintenance, disable the system control panel releasing circuit.

AGENT STORAGE CONTAINER & ACCESSORIES

System Checkout

Factors to Consider	Recommendation
The items described in System Installation, covered in the Equipment Information Section, need to be re-checked during system checkout.	
Container Pressure	Pressure should read 24.8 bar at 21°C. For temperatures other than 21°C, reference Temperature vs. Pressure Chart on the Pressure Gauge Component Sheet in the Equipment Section of this manual.
Agent Weight	Amount of agent in the Container(s) must be verified by either weighing the container or by using a Liquid Level Indictor (LLi). This information should be recorded and affixed to the container so it can be used during container maintenance.
Low Pressure Switch	If used, check to ensure device is installed properly to container and wired properly to control panel.
Impulse Valve Operator (IVO)	Check to ensure the IVO circuit is free of trouble and ground fault conditions before installing the IVO to the container.

While every precaution has been taken during the preparation of this document to ensure the accuracy of its content, Fike assumes no responsibility for errors or omissions. Fike reserves the right to make changes to the product or this document without notice.

Maintenance

IMPORTANT NOTE: These procedures do not preclude those required by NFPA 2001 and the authority having jurisdiction (AHJ).

Interval	Factor	Recommendation
3 Months	Check Container Pressure	The nominal pressure should be 24.8 bar @ 21°C; however, the pressure will vary with temperature. In the range of 10°C to 27°C the difference is approximately 15 kPa per degree. For temperatures other than 21°C, reference Temperature vs. Pressure Chart on the Pressure Gauge Component Sheet in the Equipment Section of this manual. If the pressure loss indicated exceeds 10% of the nominal pressure, check the container for leaks and repair as necessary.
6 Months	Verify Agent Weight	Verify the weight of the agent in each container matches the agent weight stamped on the label. If the weight indicates a shortage exceeding five percent of required weight, the container must be removed from service for repair and/or recharge. If the container has a liquid level indicator installed, weight verification can be made without the need for cylinder removal.
10 Years	Container Inspection	Containers shall be retest if more than ten years have elapsed since the last test. The retest shall be in accordance with instructions P200 in the ADR (International Carriage of Dangerous Goods by Road). Cylinders continuously in service without discharging shall receive a complete external [visual] inspection every ten years. The cylinder does not need to be emptied for this inspection. All visual inspections must be performed in accordance with instructions P200 in the ADR (International Carriage of Dangerous Goods by Road)

PIPE NETWORK

System Checkout

Factors to Consider	Recommendation
Discharge Piping	Check to ensure Piping is installed according to the system design drawings. If not, system needs to be recalculated.
	Checked piping to see that it is securely supported and free from any lateral movement. All joints should be checked for mechanical tightness. Discharge piping shall be pressure tested in accordance with NFPA 2001, latest edition.
Discharge Pressure Switch	Check to ensure the Discharge Pressure Switch is installed and wired correctly.
Check Valves	If used, check to ensure the “Flow Arrow” is pointing in the correct direction.

While every precaution has been taken during the preparation of this document to ensure the accuracy of its content, Fike assumes no responsibility for errors or omissions. Fike reserves the right to make changes to the product or this document without notice.

Maintenance

Interval	Factor	Recommendation
6 Months	Condition of Pipe	Check the system discharge piping for corrosion and damage.
	Pipe Supports	Check all piping supports to make sure they are tight and all piping is securely supported.

DISCHARGE NOZZLES

System Checkout

Factors to Consider	Recommendation
Nozzle Part Number vs Location	Verify that the correct nozzle part number is installed at the proper location in accordance with the system plans. If the piping system was changed from the original system plans, make sure the nozzles were calculated using the "as installed" piping configuration.
	Check to ensure the nozzle(s) is aimed / positioned correctly.
Set Screws	Make sure all nozzle set screws are in place.
Nozzle Orifices	Check to see that nozzle orifices are clear and unobstructed.

Maintenance

Interval	Factor	Recommendation
6 Months	The items described in System Checkout need to be re-checked during system maintenance.	
	Corrosion	Verify that the orifices are not showing signs of corrosion.
	Obstructions	Check all nozzle orifices for obstructions and make sure large objects have not been placed in front of the nozzles that would block the discharge.

DETECTION AND CONTROL SYSTEM

The information contained in this document **does not** cover service and maintenance procedures for the Detection and Control System (electrical portion). The electrical portion of the system must be thoroughly checked out according to the manufacturer's recommendations and the requirements of the AHJ.

IMPORTANT NOTE: Do not arm the Fike Clean Agent Fire Suppression system before the Detection and Control System has been checked out and all circuits are free of trouble and ground fault conditions. If control panel checks out, install the Impulse Valve Operator (IVO) to the container(s).

While every precaution has been taken during the preparation of this document to ensure the accuracy of its content, Fike assumes no responsibility for errors or omissions. Fike reserves the right to make changes to the product or this document without notice.

3” CHECK VALVE DAMPER REPLACEMENT PROCEDURE

IMPORTANT NOTES: Before starting this procedure, disable the system control panel releasing circuit.

This only applies to the 3” check valves that have opened due to agent pressure.

Dampers “DO NOT” need to be replaced in 1” & 2” check valves.

Step 1: To replace the damper, remove the cap on the 3” check valve.

Step 2: Remove old damper.

Step 3: Insert new damper (p/n 70-322) and screw check valve cap (wrench tight) on the 3” check valve.

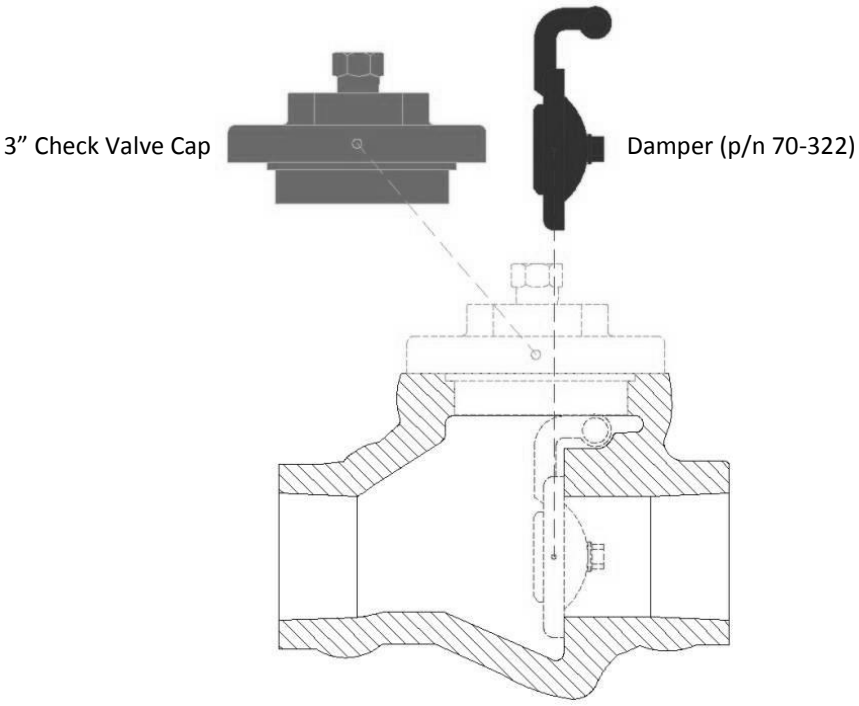

3” Check Valve (p/n 70-317)

NOTE: After procedure is completed on all 3” check valves involved, system can be rearmed.

While every precaution has been taken during the preparation of this document to ensure the accuracy of its content, Fike assumes no responsibility for errors or omissions. Fike reserves the right to make changes to the product or this document without notice.

SAFETY DATA SHEETS

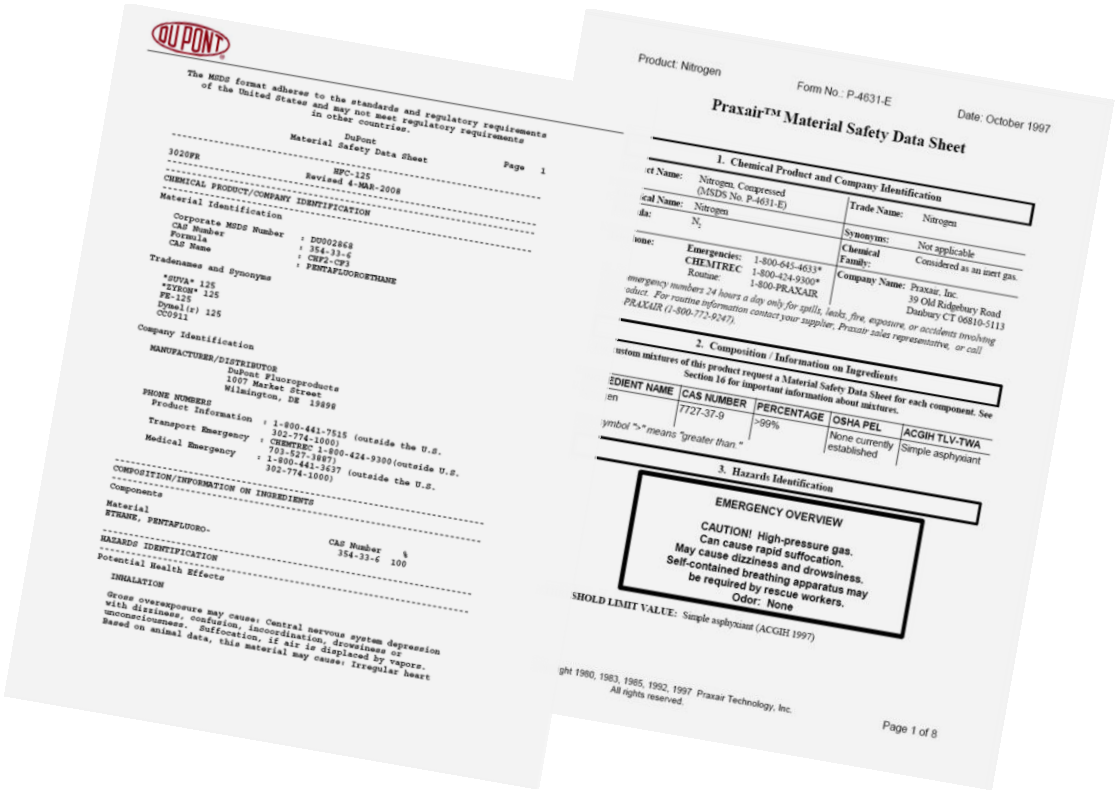

DUPONT

The MSDS format adheres to the standards and regulatory requirements of the United States and may not meet regulatory requirements in other countries.

DuPont
Material Safety Data Sheet

3020PR Page 1

HPC-125
Revised 4-MAR-2008

CHEMICAL PRODUCT/COMPANY IDENTIFICATION

Material Identification

Corporate MSDS Number : DU002468
CAS Number : 354-33-6
Formula : CHF2-CF3
CAS Name : PENTAFLUOROETHANE

Tradenames and Synonyms

SUVA 125
ZYRON 125
FE-125
Dymel(r) 125
CC0911

Company Identification

MANUFACTURER/DISTRIBUTOR
DuPont Fluoroproducts
1007 Market Street
Wilmington, DE 19898

PHONE NUMBERS
Product Information : 1-800-441-7515 (outside the U.S. 302-774-1000)
Transport Emergency : CHEMTREC 1-800-424-9300(outside U.S. 703-527-3887)
Medical Emergency : 1-800-441-3637 (outside the U.S. 302-774-1000)

COMPOSITION/INFORMATION ON INGREDIENTS

Components

Material | CAS Number | %
ETHANE, PENTAFLUORO- | 354-33-6 | 100

HAZARDS IDENTIFICATION

Potential Health Effects

INHALATION

Gross overexposure may cause: Central nervous system depression with dizziness, confusion, incoordination, drowsiness or unconsciousness. Suffocation, if air is displaced by vapors. Based on animal data, this material may cause: Irregular heart

Product: Nitrogen

Form No.: P-4631-E

Date: October 1997

Praxair™ Material Safety Data Sheet

1. Chemical Product and Company Identification

ct Name: Nitrogen, Compressed (MSDS No. P-4631-E)
cal Name: Nitrogen
da: N_2
one:

Trade Name: Nitrogen
Synonyms: Not applicable
Chemical Family: Considered as an inert gas.
Company Name: Praxair, Inc. 39 Old Ridgebury Road Danbury CT 06810-5113

Emergencies: 1-800-645-4633*
CHEMTREC 1-800-424-9300*
Routine: 1-800-PRAXAIR

emergency numbers 24 hours a day only for spills, leaks, fire, exposure, or accidents involving oduct. For routine information contact your supplier; Praxair sales representative, or call PRAXAIR (1-800-772-9247).

2. Composition / Information on Ingredients

ustom mixtures of this product request a Material Safety Data Sheet for each component. See Section 16 for important information about mixtures.

EDIENT NAME	CAS NUMBER	PERCENTAGE	OSHA PEL	ACGIH TLV-TWA
en	7727-37-9	>99%	None currently established	Simple asphyxiant

ymbol ">" means "greater than."

3. Hazards Identification

EMERGENCY OVERVIEW

CAUTION! High-pressure gas.
Can cause rapid suffocation.
May cause dizziness and drowsiness.
Self-contained breathing apparatus may be required by rescue workers.
Odor: None

SHOLD LIMIT VALUE: Simple asphyxiant (ACGIH 1997)

ght 1980, 1983, 1985, 1992, 1997 Praxair Technology, Inc. All rights reserved.

Page 1 of 8

While every precaution has been taken during the preparation of this document to ensure the accuracy of its content, Fike assumes no responsibility for errors or omissions. Fike reserves the right to make changes to the product or this document without notice.

FM-200®

Version 2.2

Revision Date 05/09/2015 Ref. 130000036866

This SDS adheres to the standards and regulatory requirements of the United States and may not meet the regulatory requirements in other countries.

SECTION 1. PRODUCT AND COMPANY IDENTIFICATION

Product name	:	FM-200®
Tradename/Synonym	:	FE-227 2-Hydroperfluoropropane Propane, 1,1,1,2,3,3,3-Heptafluoro- HFC-227eaHP 2-Hydroheptafluoropropane Heptafluoropropane 2-H-heptafluoropropane 1,1,1,2,3,3,3-Heptafluoropropane R-227 R227 HFC-227ea
Product Use	:	Fire extinguishing agent, For professional users only.
Restrictions on use	:	Do not use product for anything outside of the above specified uses
Manufacturer/Supplier	:	DuPont 1007 Market Street Wilmington, DE 19898 United States of America
Product Information	:	+1-800-441-7515 (outside the U.S. +1-302-774-1000)
Medical Emergency	:	1-800-441-3637 (outside the U.S. 1-302-774-1139)
Transport Emergency	:	CHEMTREC: +1-800-424-9300 (outside the U.S. +1-703-527-3887)

SECTION 2. HAZARDS IDENTIFICATION

Product hazard category

Gases under pressure Liquefied gas

Label content

Pictogram :



Signal word : Warning

Hazardous warnings : Contains gas under pressure; may explode if heated.

Hazardous prevention measures : Protect from sunlight. Store in a well-ventilated place.

Other hazards

Misuse or intentional inhalation abuse may lead to death without warning.
Vapours are heavier than air and can cause suffocation by reducing oxygen available for breathing.
Rapid evaporation of the liquid may cause frostbite.

SECTION 3. COMPOSITION/INFORMATION ON INGREDIENTS

Component	CAS-No.	Concentration
1,1,1,2,3,3,3-Heptafluoropropane	431-89-0	100 %

SECTION 4. FIRST AID MEASURES

General advice	:	Never give anything by mouth to an unconscious person. When symptoms persist or in all cases of doubt seek medical advice.
Inhalation	:	Remove from exposure, lie down. Move to fresh air. Keep patient warm and at rest. Artificial respiration and/or oxygen may be necessary. Consult a physician.
Skin contact	:	In case of contact, immediately flush skin with plenty of water for at least 15 minutes. Take off all contaminated clothing immediately. Consult a physician. Wash contaminated clothing before re-use. Treat for frostbite if necessary by gently warming affected area.
Eye contact	:	In case of contact, immediately flush eyes with plenty of water for at least 15 minutes. Consult a physician if necessary.
Ingestion	:	Is not considered a potential route of exposure.
Most important symptoms/effects, acute and delayed	:	No applicable data available.
Protection of first-aiders	:	If potential for exposure exists refer to Section 8 for specific personal protective equipment.
Notes to physician	:	Because of possible disturbances of cardiac rhythm, catecholamine drugs, such as epinephrine, that may be used in situations of emergency life support should be used with special caution.

SECTION 5. FIREFIGHTING MEASURES

Suitable extinguishing media	:	This material is a fire extinguishing agent.
Unsuitable extinguishing media	:	No applicable data available.
Specific hazards	:	The product is not flammable.
Special protective equipment for firefighters	:	No applicable data available.
Further information	:	No applicable data available.

SECTION 6. ACCIDENTAL RELEASE MEASURES

NOTE: Review FIRE FIGHTING MEASURES and HANDLING (PERSONNEL) sections before proceeding with clean-up. Use appropriate PERSONAL PROTECTIVE EQUIPMENT during clean-up.

Safeguards (Personnel)	:	Evacuate personnel, thoroughly ventilate area, use self-contained breathing apparatus. Keep upwind of leak - evacuate until gas has dispersed.
Environmental precautions	:	Should not be released into the environment. In accordance with local and national regulations.
Spill Cleanup	:	Evaporates. Ventilate area using forced ventilation, especially low or enclosed places where heavy vapors might collect.
Accidental Release Measures	:	No applicable data available.

SECTION 7. HANDLING AND STORAGE

Handling (Personnel)	:	Do not breathe gas. Avoid contact with skin, eyes and clothing. Provide sufficient air exchange and/or exhaust in work rooms. For personal protection see section 8. Wash hands thoroughly after handling. Wash clothing after use. Decomposition will occur when product comes in contact with open flame or electrical heating elements. Handle in accordance with good industrial hygiene and safety practice.
Handling (Physical Aspects)	:	No applicable data available.
Dust explosion class	:	No applicable data available.
Storage	:	Valve protection caps and valve outlet threaded plugs must remain in place unless container is secured with valve outlet piped to use point. Do not drag, slide or roll cylinders. Never attempt to lift cylinder by its cap. Use a check valve or trap in the discharge line to prevent hazardous back flow into the cylinder. Cylinders should be stored upright and firmly secured to prevent falling or being knocked over. Separate full containers from empty containers. Keep at temperature not exceeding 52°C. Do not store near combustible materials. Keep container tightly closed in a dry and well-ventilated place.

Store in original container.
Protect from contamination.
Avoid area where salt or other corrosive materials are present.
The product has an indefinite shelf life when stored properly.

Storage period : > 10 yr

Storage temperature : < 52 °C (< 126 °F)

SECTION 8. EXPOSURE CONTROLS/PERSONAL PROTECTION

Engineering controls : Use only with adequate ventilation. Keep container tightly closed.

Personal protective equipment

Respiratory protection : Wear NIOSH approved respiratory protection as appropriate.

Hand protection : Additional protection: Impervious gloves

Eye protection : Safety glasses with side-shields Additionally wear a face shield where the possibility exists for face contact due to splashing, spraying or airborne contact with this material.

Skin and body protection : Where there is potential for skin contact, have available and wear as appropriate, impervious gloves, apron, pants, jacket, hood and boots.

Protective measures : Self-contained breathing apparatus (SCBA) is required if a large release occurs.

Exposure Guidelines

Exposure Limit Values

1,1,1,2,3,3,3-Heptafluoropropane

AEL *	(DUPONT)	1,000 ppm	8 & 12 hr. TWA

* AEL is DuPont's Acceptable Exposure Limit. Where governmentally imposed occupational exposure limits which are lower than the AEL are in effect, such limits shall take precedence.

SECTION 9. PHYSICAL AND CHEMICAL PROPERTIES

Appearance		
Physical state	:	gaseous
Form	:	Liquefied gas
Color	:	No applicable data available.
Odor	:	none
Odor threshold	:	No applicable data available.
pH	:	No applicable data available.
Melting point/freezing point	:	Melting point/range -131 °C (-204 °F)
Boiling point/boiling range	:	Boiling point -16.3 °C (2.7 °F)
Flash point	:	No applicable data available.
Evaporation rate	:	No applicable data available.
Flammability (solid, gas)	:	The product is not flammable.
Upper explosion limit	:	Method: None per ASTM E681-98
Lower explosion limit	:	Method: None per ASTM E681-98
Vapor pressure	:	4.547 hPa at 25 °C (77 °F)
Vapour density	:	No applicable data available.
Density	:	1.388 g/cm3 at 25 °C (77 °F) (as liquid)
Specific gravity (Relative density)	:	No applicable data available.
Water solubility	:	No applicable data available.
Solubility(ies)	:	No applicable data available.
Partition coefficient: n-octanol/water	:	No applicable data available.

Auto-ignition temperature	:	No applicable data available.
Decomposition temperature	:	No applicable data available.
Viscosity, kinematic	:	No applicable data available.
Viscosity, dynamic	:	No applicable data available.

SECTION 10. STABILITY AND REACTIVITY

Reactivity	:	Decomposes on heating.
Chemical stability	:	Stable at normal temperatures and storage conditions.
Possibility of hazardous reactions	:	Polymerization will not occur.
Conditions to avoid	:	The product is not flammable in air under ambient conditions of temperature and pressure. When pressurised with air or oxygen, the mixture may become flammable. Certain mixtures of HCFCs or HFCs with chlorine may become flammable or reactive under certain conditions. To avoid thermal decomposition, do not overheat.
Incompatible materials	:	Alkali metals Alkaline earth metals, Powdered metals, Powdered metal salts
Hazardous decomposition products	:	Hazardous decomposition products formed under fire conditions.: Hazardous thermal decomposition products may include: Hydrogen halides, Carbon oxides, Fluorocarbons, Carbonyl halides

SECTION 11. TOXICOLOGICAL INFORMATION

FM-200®

Inhalation 4 h LC50	:	> 788698 ppm , Rat
Inhalation	:	Dog Cardiac sensitization
Dermal	:	Not applicable
Oral	:	Not applicable
Skin irritation	:	No skin irritation, Not tested on animals Not expected to cause skin irritation based on expert review of the

properties of the substance.

Eye irritation : No eye irritation, Not tested on animals
Not expected to cause eye irritation based on expert review of the properties of the substance.

Sensitisation : Does not cause skin sensitisation., Not tested on animals
Not expected to cause sensitization based on expert review of the properties of the substance.

Did not cause sensitisation on laboratory animals. There are no reports of human respiratory sensitization.

Repeated dose toxicity : Inhalation
Rat
-
No toxicologically significant effects were found.

Further information : Cardiac sensitisation threshold limit : 730190 mg/m3

1,1,1,2,3,3,3-Heptafluoropropane

Carcinogenicity : Not classifiable as a human carcinogen.
Animal testing did not show any carcinogenic effects.

Mutagenicity : Animal testing did not show any mutagenic effects.
Tests on bacterial or mammalian cell cultures did not show mutagenic effects.

Reproductive toxicity : No toxicity to reproduction
Animal testing showed no reproductive toxicity.

Teratogenicity : Animal testing showed no developmental toxicity.

Carcinogenicity

The carcinogenicity classifications for this product and/or its ingredients have been determined according to HazCom 2012, Appendix A.6. The classifications may differ from those listed in the National Toxicology Program (NTP) Report on Carcinogens (latest edition) or those found to be a potential carcinogen in the International Agency for Research on Cancer (IARC) Monographs (latest edition).

None of the components present in this material at concentrations equal to or greater than 0.1% are listed by IARC, NTP, or OSHA, as a carcinogen.

SECTION 12. ECOLOGICAL INFORMATION

Aquatic Toxicity
1,1,1,2,3,3,3-Heptafluoropropane

96 h LC50	:	Danio rerio (zebra fish) > 200 mg/l OECD Test Guideline 203 Information given is based on data obtained from similar substances.
72 h ErC50	:	Pseudokirchneriella subcapitata (green algae) > 114 mg/l OECD Test Guideline 201 Information given is based on data obtained from similar substances.
72 h NOEC	:	Pseudokirchneriella subcapitata (green algae) 13.2 mg/l OECD Test Guideline 201 Information given is based on data obtained from similar substances.
48 h EC50	:	Daphnia magna (Water flea) > 200 mg/l OECD Test Guideline 202 Information given is based on data obtained from similar substances.

SECTION 13. DISPOSAL CONSIDERATIONS

Waste disposal methods - Product	:	Can be used after re-conditioning. Recover by distillation or remove to a permitted waste disposal facility. Comply with applicable Federal, State/Provincial and Local Regulations.
Contaminated packaging	:	Empty pressure vessels should be returned to the supplier.

SECTION 14. TRANSPORT INFORMATION

DOT	UN number	:	3296
	Proper shipping name	:	Heptafluoropropane
	Class	:	2.2
	Labelling No.	:	2.2
IATA_C	UN number	:	3296

	Proper shipping name	:	Heptafluoropropane
	Class	:	2.2
	Labelling No.	:	2.2
IMDG	UN number	:	3296
	Proper shipping name	:	HEPTAFLUOROPROPANE
	Class	:	2.2
	Labelling No.	:	2.2

SECTION 15. REGULATORY INFORMATION

TSCA	:	On the inventory, or in compliance with the inventory
SARA 313 Regulated Chemical(s)	:	This material does not contain any chemical components with known CAS numbers that exceed the threshold (De Minimis) reporting levels established by SARA Title III, Section 313.
California Prop. 65	:	Chemicals known to the State of California to cause cancer, birth defects or any other harm: none known

SECTION 16. OTHER INFORMATION

® DuPont's registered trademark
Before use read DuPont's safety information.
For further information contact the local DuPont office or DuPont's nominated distributors.

Revision Date : 05/09/2015

The information provided in this Safety Data Sheet is correct to the best of our knowledge, information and belief at the date of its publication. The information given is designed only as a guidance for safe handling, use, processing, storage, transportation, disposal and release and is not to be considered a warranty or quality specification. The information relates only to the specific material designated and may not be valid for such material used in combination with any other materials or in any process, unless specified in the text.

Significant change from previous version is denoted with a double bar.



Nitrogen, compressed

Safety Data Sheet P-4631

according to U.S. Code of Federal Regulations 29 CFR 1910.1200, Hazard Communication.

Date of issue: 01/01/1980 Revision date: 06/24/2015 Supersedes: 04/23/2015

SECTION: 1. Product and company identification

1.1. Product identifier

Product form	:	Substance
Name	:	Nitrogen, compressed
CAS No	:	7727-37-9
Formula	:	N2
Other means of identification	:	Dinitrogen, Refrigerant R728, Nitrogen, Medipure Nitrogen, Extendapak Nitrogen, Nitrogen - Diving Grade

1.2. Relevant identified uses of the substance or mixture and uses advised against

Use of the substance/mixture	:	Industrial use Medical applications. Food applications. Diving Gas (Underwater Breathing)

1.3. Details of the supplier of the safety data sheet

Praxair, Inc.
39 Old Ridgebury Road
Danbury, CT 06810-5113 - USA
T 1-800-772-9247 (1-800-PRAXAIR) - F 1-716-879-2146
www.praxair.com

1.4. Emergency telephone number

Emergency number	:	Onsite Emergency: 1-800-645-4633 CHEMTREC, 24hr/day 7days/week — Within USA: 1-800-424-9300, Outside USA: 001-703-527-3887 (collect calls accepted, Contract 17729)

SECTION 2: Hazards identification

2.1. Classification of the substance or mixture

Classification (GHS-US)

Compressed gas H280

2.2. Label elements

GHS-US labeling

Hazard pictograms (GHS-US) :



GHS04

Signal word (GHS-US)	:	WARNING
Hazard statements (GHS-US)	:	H280 - CONTAINS GAS UNDER PRESSURE; MAY EXPLODE IF HEATED OSHA-H01 - MAY DISPLACE OXYGEN AND CAUSE RAPID SUFFOCATION.
Precautionary statements (GHS-US)	:	P202 - Do not handle until all safety precautions have been read and understood P271+P403 - Use and store only outdoors or in a well-ventilated place. CGA-PG05 - Use a back flow preventive device in the piping. CGA-PG10 - Use only with equipment rated for cylinder pressure. CGA-PG06 - Close valve after each use and when empty. CGA-PG02 - Protect from sunlight when ambient temperature exceeds 52°C (125°F).

2.3. Other hazards

No additional information available

This document is only controlled while on the Praxair, Inc. website and a copy of this controlled version is available for download.
Praxair cannot assure the integrity or accuracy of any version of this document after it has been downloaded or removed from our website.

2.4. Unknown acute toxicity (GHS-US)

No data available

SECTION 3: Composition/information on ingredients

3.1. Substance

Name : Nitrogen, compressed

CAS No : 7727-37-9

Name	Product identifier	%
Nitrogen	(CAS No) 7727-37-9	99.5 - 100

3.2. Mixture

Not applicable

SECTION 4: First aid measures

4.1. Description of first aid measures

First-aid measures after inhalation : Immediately remove to fresh air. If not breathing, give artificial respiration. If breathing is difficult, qualified personnel may give oxygen. Call a physician.

First-aid measures after skin contact : Adverse effects not expected from this product.

First-aid measures after eye contact : Adverse effects not expected from this product. In case of eye irritation: Rinse immediately with plenty of water. Consult an ophthalmologist if irritation persists.

First-aid measures after ingestion : Ingestion is not considered a potential route of exposure.

4.2. Most important symptoms and effects, both acute and delayed

No additional information available

4.3. Indication of any immediate medical attention and special treatment needed

None.

SECTION 5: Firefighting measures

5.1. Extinguishing media

Suitable extinguishing media : Use extinguishing media appropriate for surrounding fire.

5.2. Special hazards arising from the substance or mixture

Reactivity : Under certain conditions, nitrogen can react violently with lithium, neodymium, titanium (above 1472°F/800°C), and magnesium to form nitrides. At high temperature, it can also combine with oxygen and hydrogen.

5.3. Advice for firefighters

Firefighting instructions : Evacuate all personnel from the danger area. Use self-contained breathing apparatus (SCBA) and protective clothing. Immediately cool containers with water from maximum distance. Stop flow of gas if safe to do so, while continuing cooling water spray. Remove ignition sources if safe to do so. Remove containers from area of fire if safe to do so. On-site fire brigades must comply with OSHA 29 CFR 1910.156 and applicable standards under 29 CFR 1910 Subpart L—Fire Protection.

Protection during firefighting : Compressed gas: asphyxiant. Suffocation hazard by lack of oxygen.

Special protective equipment for fire fighters : Standard protective clothing and equipment (Self Contained Breathing Apparatus) for fire fighters.

Specific methods : Use fire control measures appropriate for the surrounding fire. Exposure to fire and heat radiation may cause gas containers to rupture. Cool endangered containers with water spray jet from a protected position. Prevent water used in emergency cases from entering sewers and drainage systems.

Stop flow of product if safe to do so.

Use water spray or fog to knock down fire fumes if possible.

SECTION 6: Accidental release measures

6.1. Personal precautions, protective equipment and emergency procedures

General measures : Evacuate area. Ensure adequate air ventilation. Wear self-contained breathing apparatus when entering area unless atmosphere is proven to be safe. Stop leak if safe to do so.

This document is only controlled while on the Praxair, Inc. website and a copy of this controlled version is available for download.
Praxair cannot assure the integrity or accuracy of any version of this document after it has been downloaded or removed from our website.

6.1.1. For non-emergency personnel

No additional information available

6.1.2. For emergency responders

No additional information available

6.2. Environmental precautions

No additional information available

6.3. Methods and material for containment and cleaning up

No additional information available

6.4. Reference to other sections

See also sections 8 and 13.

SECTION 7: Handling and storage

7.1. Precautions for safe handling

Precautions for safe handling : Wear leather safety gloves and safety shoes when handling cylinders. Protect cylinders from physical damage; do not drag, roll, slide or drop. While moving cylinder, always keep in place removable valve cover. Never attempt to lift a cylinder by its cap; the cap is intended solely to protect the valve. When moving cylinders, even for short distances, use a cart (trolley, hand truck, etc.) designed to transport cylinders. Never insert an object (e.g., wrench, screwdriver, pry bar) into cap openings; doing so may damage the valve and cause a leak. Use an adjustable strap wrench to remove over-tight or rusted caps. Slowly open the valve. If the valve is hard to open, discontinue use and contact your supplier. Close the container valve after each use; keep closed even when empty. Never apply flame or localized heat directly to any part of the container. High temperatures may damage the container and could cause the pressure relief device to fail prematurely, venting the container contents. For other precautions in using this product, see section 16.

Safe use of the product : **The suitability of this product as a component in underwater breathing gas mixtures** is to be determined by or under the supervision of personnel experienced in the use of underwater breathing gas mixtures and familiar with the physiological effects, methods employed, frequency and duration of use, hazards, side effects, and precautions to be taken.

7.2. Conditions for safe storage, including any incompatibilities

Storage conditions : Store in a cool, well-ventilated place. Store and use with adequate ventilation. Store only where temperature will not exceed 125°F (52°C). Firmly secure containers upright to keep them from falling or being knocked over. Install valve protection cap, if provided, firmly in place by hand. Store full and empty containers separately. Use a first-in, first-out inventory system to prevent storing full containers for long periods.

OTHER PRECAUTIONS FOR HANDLING, STORAGE, AND USE: When handling product under pressure, use piping and equipment adequately designed to withstand the pressures to be encountered. Never work on a pressurized system. Use a back flow preventive device in the piping. Gases can cause rapid suffocation because of oxygen deficiency; store and use with adequate ventilation. If a leak occurs, close the container valve and blow down the system in a safe and environmentally correct manner in compliance with all international, federal/national, state/provincial, and local laws; then repair the leak. Never place a container where it may become part of an electrical circuit.

7.3. Specific end use(s)

None.

SECTION 8: Exposure controls/personal protection

8.1. Control parameters

Nitrogen, compressed (7727-37-9)	
ACGIH	Not established
USA OSHA	Not established

Nitrogen (7727-37-9)	
ACGIH	Not established
USA OSHA	Not established

This document is only controlled while on the Praxair, Inc. website and a copy of this controlled version is available for download.
Praxair cannot assure the integrity or accuracy of any version of this document after it has been downloaded or removed from our website.

8.2. Exposure controls

Appropriate engineering controls	:	Use a local exhaust system with sufficient flow velocity to maintain an adequate supply of air in the worker's breathing zone. Mechanical (general): General exhaust ventilation may be acceptable if it can maintain an adequate supply of air.
Eye protection	:	Wear safety glasses with side shields.
Skin and body protection	:	Wear metatarsal shoes and work gloves for cylinder handling, and protective clothing where needed. Wear appropriate chemical gloves during cylinder changeout or wherever contact with product is possible. Select per OSHA 29 CFR 1910.132, 1910.136, and 1910.138.
Respiratory protection	:	When workplace conditions warrant respirator use, follow a respiratory protection program that meets OSHA 29 CFR 1910.134, ANSI Z88.2, or MSHA 30 CFR 72.710 (where applicable). Use an air-supplied or air-purifying cartridge if the action level is exceeded. Ensure that the respirator has the appropriate protection factor for the exposure level. If cartridge type respirators are used, the cartridge must be appropriate for the chemical exposure (e.g., an organic vapor cartridge). For emergencies or instances with unknown exposure levels, use a self-contained breathing apparatus (SCBA).

SECTION 9: Physical and chemical properties

9.1. Information on basic physical and chemical properties

Physical state	:	Gas
Appearance	:	Colorless gas.
Molecular mass	:	28 g/mol
Color	:	Colorless.
Odor	:	No odor warning properties.
Odor threshold	:	No data available
pH	:	Not applicable.
Relative evaporation rate (butyl acetate=1)	:	No data available
Relative evaporation rate (ether=1)	:	Not applicable.
Melting point	:	-210 °C
Freezing point	:	No data available
Boiling point	:	-195.8 °C
Flash point	:	No data available
Critical temperature	:	-149.9 °C
Auto-ignition temperature	:	Not applicable.
Decomposition temperature	:	No data available
Flammability (solid, gas)	:	No data available
Vapor pressure	:	Not applicable.
Critical pressure	:	3390 kPa
Relative vapor density at 20 °C	:	No data available
Relative density	:	No data available
Density	:	1.16 kg/m³
Relative gas density	:	0.97
Solubility	:	Water: 20 mg/l
Log Pow	:	Not applicable.
Log Kow	:	Not applicable.
Viscosity, kinematic	:	Not applicable.
Viscosity, dynamic	:	Not applicable.
Explosive properties	:	Not applicable.
Oxidizing properties	:	None.
Explosion limits	:	No data available

9.2. Other information

Gas group	:	Compressed gas
Additional information	:	None.

This document is only controlled while on the Praxair, Inc. website and a copy of this controlled version is available for download.
Praxair cannot assure the integrity or accuracy of any version of this document after it has been downloaded or removed from our website.

SECTION 10: Stability and reactivity

10.1. Reactivity

Under certain conditions, nitrogen can react violently with lithium, neodymium, titanium (above 1472°F/800°C), and magnesium to form nitrides. At high temperature, it can also combine with oxygen and hydrogen.

10.2. Chemical stability

Stable under normal conditions.

10.3. Possibility of hazardous reactions

May occur.

10.4. Conditions to avoid

None under recommended storage and handling conditions (see section 7).

10.5. Incompatible materials

None.

10.6. Hazardous decomposition products

None.

SECTION 11: Toxicological information

11.1. Information on toxicological effects

Acute toxicity : Not classified

Skin corrosion/irritation : Not classified

pH: Not applicable.

Serious eye damage/irritation : Not classified

pH: Not applicable.

Respiratory or skin sensitization : Not classified

Germ cell mutagenicity : Not classified

Carcinogenicity : Not classified

Reproductive toxicity : Not classified

Specific target organ toxicity (single exposure) : Not classified

Specific target organ toxicity (repeated exposure) : Not classified

Aspiration hazard : Not classified

SECTION 12: Ecological information

12.1. Toxicity

Ecology - general : No ecological damage caused by this product.

12.2. Persistence and degradability

Nitrogen, compressed (7727-37-9)	
Persistence and degradability	No ecological damage caused by this product.

Nitrogen (7727-37-9)	
Persistence and degradability	No ecological damage caused by this product.

12.3. Bioaccumulative potential

Nitrogen, compressed (7727-37-9)	
Log Pow	Not applicable.
Log Kow	Not applicable.
Bioaccumulative potential	No ecological damage caused by this product.

This document is only controlled while on the Praxair, Inc. website and a copy of this controlled version is available for download.
Praxair cannot assure the integrity or accuracy of any version of this document after it has been downloaded or removed from our website.

Nitrogen (7727-37-9)	
Log Pow	Not applicable for inorganic gases.
Log Kow	Not applicable.
Bioaccumulative potential	No ecological damage caused by this product.

12.4. Mobility in soil

Nitrogen, compressed (7727-37-9)	
Mobility in soil	No data available.
Ecology - soil	No ecological damage caused by this product.

Nitrogen (7727-37-9)	
Mobility in soil	No data available.
Ecology - soil	No ecological damage caused by this product.

12.5. Other adverse effects

Effect on ozone layer : None.

Effect on the global warming : None.

SECTION 13: Disposal considerations

13.1. Waste treatment methods

Waste disposal recommendations : Dispose of contents/container in accordance with local/regional/national/international regulations. Contact supplier for any special requirements.

SECTION 14: Transport information

In accordance with DOT

Transport document description : UN1066 Nitrogen, compressed, 2.2

UN-No.(DOT) : UN1066

Proper Shipping Name (DOT) : Nitrogen, compressed

Transport hazard class(es) (DOT) : 2.2 - Class 2.2 - Non-flammable compressed gas 49 CFR 173.115

Hazard labels (DOT) : 2.2 - Non-flammable gas



Additional information

Emergency Response Guide (ERG) Number : 121 (UN1066);120 (UN1977)

Other information : No supplementary information available.

Special transport precautions : Avoid transport on vehicles where the load space is not separated from the driver's compartment. Ensure vehicle driver is aware of the potential hazards of the load and knows what to do in the event of an accident or an emergency. Before transporting product containers: - Ensure there is adequate ventilation. - Ensure that containers are firmly secured. - Ensure cylinder valve is closed and not leaking. - Ensure valve outlet cap nut or plug (where provided) is correctly fitted. - Ensure valve protection device (where provided) is correctly fitted.

Transport by sea

UN-No. (IMDG) : 1066

Proper Shipping Name (IMDG) : NITROGEN, COMPRESSED

Class (IMDG) : 2 - Gases

MFAG-No : 121

Air transport

UN-No.(IATA) : 1066

Proper Shipping Name (IATA) : Nitrogen, compressed

This document is only controlled while on the Praxair, Inc. website and a copy of this controlled version is available for download.
Praxair cannot assure the integrity or accuracy of any version of this document after it has been downloaded or removed from our website.

Class (IATA)	: 2
Civil Aeronautics Law	: Gases under pressure/Gases nonflammable nontoxic under pressure

SECTION 15: Regulatory information

15.1. US Federal regulations

Nitrogen, compressed (7727-37-9)	
Listed on the United States TSCA (Toxic Substances Control Act) inventory	
SARA Section 311/312 Hazard Classes	Sudden release of pressure hazard

15.2. International regulations

CANADA

Nitrogen, compressed (7727-37-9)
Listed on the Canadian DSL (Domestic Substances List)

Nitrogen (7727-37-9)
Listed on the Canadian DSL (Domestic Substances List)

EU-Regulations

Nitrogen, compressed (7727-37-9)
Listed on the EEC inventory EINECS (European Inventory of Existing Commercial Chemical Substances)

15.2.2. National regulations

Nitrogen, compressed (7727-37-9)
Listed on the AICS (Australian Inventory of Chemical Substances) Listed on IECSC (Inventory of Existing Chemical Substances Produced or Imported in China) Listed on the Korean ECL (Existing Chemicals List) Listed on NZIoC (New Zealand Inventory of Chemicals) Listed on PICCS (Philippines Inventory of Chemicals and Chemical Substances)

15.3. US State regulations

Nitrogen, compressed(7727-37-9)	
U.S. - California - Proposition 65 - Carcinogens List	No
U.S. - California - Proposition 65 - Developmental Toxicity	No
U.S. - California - Proposition 65 - Reproductive Toxicity - Female	No
U.S. - California - Proposition 65 - Reproductive Toxicity - Male	No
State or local regulations	U.S. - Massachusetts - Right To Know List U.S. - New Jersey - Right to Know Hazardous Substance List U.S. - Pennsylvania - RTK (Right to Know) List

Nitrogen (7727-37-9)				
U.S. - California - Proposition 65 - Carcinogens List	U.S. - California - Proposition 65 - Developmental Toxicity	U.S. - California - Proposition 65 - Reproductive Toxicity - Female	U.S. - California - Proposition 65 - Reproductive Toxicity - Male	No significance risk level (NSRL)
No	No	No	No	

Nitrogen (7727-37-9)
U.S. - Massachusetts - Right To Know List U.S. - New Jersey - Right to Know Hazardous Substance List U.S. - Pennsylvania - RTK (Right to Know) List

This document is only controlled while on the Praxair, Inc. website and a copy of this controlled version is available for download.
Praxair cannot assure the integrity or accuracy of any version of this document after it has been downloaded or removed from our website.

SECTION 16: Other information

Revision date : 6/24/2015 12:00:00 AM

Other information : When you mix two or more chemicals, you can create additional, unexpected hazards. Obtain and evaluate the safety information for each component before you produce the mixture. Consult an industrial hygienist or other trained person when you evaluate the end product. Before using any plastics, confirm their compatibility with this product.

Praxair asks users of this product to study this SDS and become aware of the product hazards and safety information. To promote safe use of this product, a user should (1) notify employees, agents, and contractors of the information in this SDS and of any other known product hazards and safety information, (2) furnish this information to each purchaser of the product, and (3) ask each purchaser to notify its employees and customers of the product hazards and safety information.

The opinions expressed herein are those of qualified experts within Praxair, Inc. We believe that the information contained herein is current as of the date of this Safety Data Sheet. Since the use of this information and the conditions of use are not within the control of Praxair, Inc., it is the user's obligation to determine the conditions of safe use of the product.

Praxair SDSs are furnished on sale or delivery by Praxair or the independent distributors and suppliers who package and sell our products. To obtain current SDSs for these products, contact your Praxair sales representative, local distributor, or supplier, or download from www.praxair.com. If you have questions regarding Praxair SDSs, would like the document number and date of the latest SDS, or would like the names of the Praxair suppliers in your area, phone or write the Praxair Call Center (Phone: 1-800-PRAXAIR/1-800-772-9247; Address: Praxair Call Center, Praxair, Inc., P.O. Box 44, Tonawanda, NY 14151-0044).

PRAXAIR and the Flowing Airstream design are trademarks or registered trademarks of Praxair Technology, Inc. in the United States and/or other countries.

NFPA health hazard : 0 - Exposure under fire conditions would offer no hazard beyond that of ordinary combustible materials.

NFPA fire hazard : 0 - Materials that will not burn.

NFPA reactivity : 0 - Normally stable, even under fire exposure conditions, and are not reactive with water.

NFPA specific hazard : SA - This denotes gases which are simple asphyxiants.

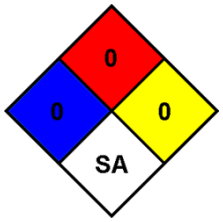

HMIS III Rating

Health : 0 Minimal Hazard - No significant risk to health

Flammability : 0 Minimal Hazard

Physical : 3 Serious Hazard

SDS US (GHS HazCom 2012) - Praxair

This information is based on our current knowledge and is intended to describe the product for the purposes of health, safety and environmental requirements only. It should not therefore be construed as guaranteeing any specific property of the product.

This document is only controlled while on the Praxair, Inc. website and a copy of this controlled version is available for download.
Praxair cannot assure the integrity or accuracy of any version of this document after it has been downloaded or removed from our website.

704 SW 10th Street
P.O. Box 610
Blue Springs, Missouri 64013

Tel: (816) 229-3405
www.fike.com