# INSTALLATION AND MAINTENANCE INSTRUCTIONS

Scored FSR Rupture Disc Assemblies

Rupture Disc Models: SCRD FSR, SCRD-V FSR, P-FSR

Holder Model: FSR



**WARNING**

- Read these instructions carefully and completely before attempting to unpack, install or service the rupture disc and holder.
- Do not vent a rupture disc assembly to an area where it would endanger personnel.
- Install the rupture disc assembly in such a way that equipment in the area will not prevent rupture disc from opening or be damaged by system discharge.
- A baffle plate on the outlet end of vent piping does NOT necessarily prevent potentially dangerous discharge.
- Piping should be braced to absorb shock when the rupture disc ruptures.
- Install the enclosed DANGER sign in a conspicuous location near the zone of potential danger.
- Spiral wound gaskets are not suitable for size 2" (DN50) in flange ratings 900-2500 ANSI, or sizes 2" (DN50), 3" (DN80), 4" (DN100) in flange ratings JIS 30k, 40k, 63k.
- If the disc features a fluoropolymer liner, do not remove this component.
- For installations under a pressure relief valve, refer to Fike Technical Bulletin TB8105 for code requirements and best practices.

## A. NEW RUPTURE DISCS

**CAUTION:** Always handle the rupture disc with extreme caution. Nicks, dents, scratches or foreign material may result in leakage or affect the burst pressure. Read the rupture disc marking and loose rupture disc tag completely before installing to confirm that the size and type are correct for your system.

1. Carefully remove the rupture disc from its packaging container.
2. Inspect the rupture disc for damage. Look for dents, scratches or dings in the seat area or dents in the dome of the rupture disc. No dents are allowed in the dome of the disc.
3. Verify the loose tag and rupture disc have the same lot numbers marked.
4. The flanges must be clean and free of rust and other contamination.

## B. MAINTAINING EXISTING RUPTURE DISCS

The rupture disc should not be removed from service and reinstalled. The outside of the flange and holder can be visually inspected. If the holder is removed from service for any reason, reinstall with new rupture disc.

## C. NEW HOLDER

1. Carefully remove the pre-assembly screws (or side clips) and discard the white shipping protector.
2. Inspect the holder seat area for scratches, dents, nicks or dirt.
3. If necessary, clean dust or dirt on the holder seat area with a solvent that is compatible with your media.
4. Attach the loose rupture disc tag to one of the studs or the flange.

## D. EXISTING HOLDER

1. Carefully remove the holder from the piping.
2. Separate the base and holddown. Remove the rupture disc from the holder and discard.
3. Remove the loose tag associated with the rupture disc and discard.
4. Check to make sure the gasket faces of the assembly are flat by placing a straight edge across the face. If faces are not flat, the holder is not suitable for use (See Figure 1).

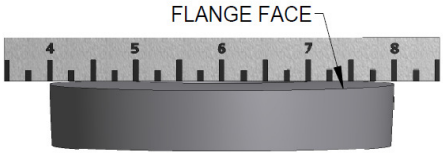


**Figure 1 - Measuring for Flatness**

5. Inspect the holder seat area for scratches, dents, nicks or dirt. Clean the holder seat area with a solvent that is compatible with your media. The holder may be hand polished with ScotchBrite™, fine emery cloth or #0000 steel wool. DO NOT MACHINE THE RUPTURE DISC HOLDER! If scratches, nicks, corrosion or deposits from the media cannot be removed by hand polishing, contact the factory.

## E. ASSEMBLY

**WARNING:** Before attempting to assemble the rupture disc and holder, confirm that the seat area of the rupture disc is designed to fit the rupture disc holder.

1. Place the base on a work surface with seating surface facing up.
2. Place the rupture disc into the base with the dome facing up.
3. Carefully place holddown onto rupture disc with flow arrow in the same direction as the base flow arrow. Verify the base, rupture disc and holddown are properly seated and engaged into the ring groove (See Figure 2).

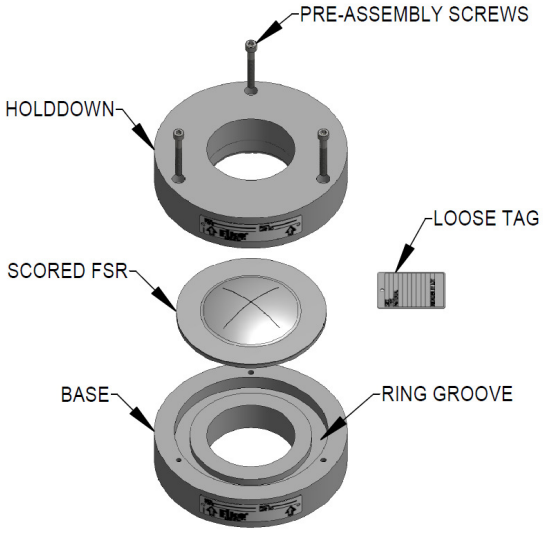


**Figure 2 - FSR Holder with Pre-assembly Screws**

**NOTE:** For sizes .5" to 6", ring groove is in the base and rupture disc is supplied with ring on inlet. For sizes greater than 8", ring groove is in the holddown and rupture disc is supplied with ring on outlet

4. Rotate holddown to align pre-assembly or side clip holes.
5. If holder configuration is TQ, before installing capscrews, lubricate the capscrew threads and the underside of the head with a light oil such as SAE grade 20. Skip step 6.

6. Install and tighten pre-assembly screws until recessed and snug in the holder. DO NOT APPLY TORQUE TO PRE-ASSEMBLY SCREWS! Sealing pressure is applied with companion flange studs and nuts.
7. Check gap between base and holddown. The gap should be the same size on all sides of the assembly. (Approximately 1/8" to 3/16".) This can be assured by measuring the distance between the holddown and base at various places around the circumference of the assembly. If the gap is not even, disassemble and carefully inspect all parts. Disc or holder damage may have occurred. Adjust pre-assembly screws if necessary to provide an even gap. If the holder gap is not equal with the rupture disc set in place, contact Fike for repair or replacement. Do not machine the rupture disc holder (See Figure 3).




**Figure 3 - Gap Inspection**

8. If holder configuration is TQ, torque capscrews to values shown in Table 1 using crisscross pattern in 20% increments until the full torque is achieved.

   **NOTE:** Follow the torque instructions in this document unless a specific torque requirement is stated on the Rupture Disc and/or Rupture Disc Holder Tag.

**NOTE:** Special design holders will have capscrew torque marked on the holder.

**TABLE 1 – TQ Capscrew Torques**

| Capscrew Size | Torque | |
|---|---|---|
| | ft-lb | N-m |
| 1/4" | 4 | 5 |
| 5/16" | 8 | 11 |
| 3/8" | 12 | 16 |
| 7/16" | 20 | 27 |
| 1/2" | 30 | 41 |
| 5/8" | 60 | 81 |
| 3/4" | 100 | 136 |
| 7/8" | 160 | 217 |

**NOTE**: Torque values are based on a nut factor, K = 0.20.

9. After recommended torque has been achieved, perform a final tightening in a clockwise bolt-to-bolt fashion to ensure all capscrews have equal loading.

**F. INSTALLATION**

1. Place gaskets on top and bottom of assembly. Gaskets subject to relaxation or cold flow are not recommended.
2. Carefully slide rupture disc assembly between companion flanges.

**WARNING:** Verify flow arrows are pointed in the same direction as the process flow. If the dome of the rupture disc extends beyond the holddown, take extra caution when installing the rupture disc assembly.

3. If necessary, clean the threads on studs and nuts. Wire brushing is usually sufficient. Fike recommends SAE 20 oil as a fastener lubricant. Commercial thread lubricants are recommended whenever conditions warrant. These conditions may include corrosive, marine and outdoor environments, service temperatures greater than 212°F (100°C), or stainless steel on stainless steel threads.

4. Do not use studs & nuts that show evidence of galling. Finger-tighten flange bolt nuts. Refer to the rupture disc tag for the recommended torque value.
5. Refer to Table 2 to obtain torque value. Locate the nominal disc size and flange rating of rupture disc assembly to find the required torque in ft-lb for your rupture disc assembly.
6. Using a crisscross pattern shown in Figure 4, apply torque in four steps of 25% increments. For example, if the torque required is 100 ft-lb, the torque should be applied in 25 ft-lb increments. Apply 25 ft-lb to each nut, then 50 ft-lb, then 75 ft-lb, etc.

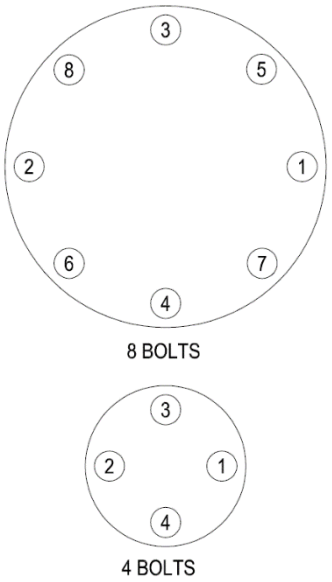


**Figure 4 - Bolt Tightening Sequence**

7. After the recommended torque has been achieved, perform a final tightening in a clockwise bolt-to-bolt fashion to ensure that all studs have equal loading.
8. Attach the loose rupture disc tag to one of the studs or the flange.
9. Experience has shown that in some installation conditions, it may be necessary to re-torque the flange bolting after the system has operated through normal pressure and temperature cycles.
10. Check the orientation of the rupture disc. Verify flow arrows are pointed in the same direction as the process flow.

Under normal operating conditions, the rupture disc should be replaced annually. Severe operating conditions may require that the rupture disc be replaced more often.

**NOTE**: Rupture disc specifications and year of manufacture can be found on the rupture disc tag.

**Table 2 – Stud Torque**

| Nominal Pipe Size-In | Flange Rating | Torque | |
|---|---|---|---|
| | | Ft-Lbs | N-m |
| 1/2 | 300 | 30 | 41 |
| | 600 | 30 | 41 |
| | 900 | 100 | 136 |
| | 1500 | 100 | 136 |
| | 2500 | 100 | 136 |
| 3/4 | 300 | 60 | 81 |
| | 600 | 60 | 81 |
| | 900 | 100 | 136 |
| | 1500 | 100 | 136 |
| | 2500 | 100 | 136 |
| 1 | 300 | 60 | 81 |
| | 600 | 60 | 81 |
| | 900 | 160 | 217 |
| | 1500 | 160 | 217 |
| | 2500 | 160 | 217 |
| 1 1/2 | 300 | 100 | 136 |
| | 600 | 100 | 136 |
| | 900 | 245 | 332 |
| | 1500 | 245 | 332 |
| | 2500 | 355 | 481 |
| 2 | 300 | 60 | 81 |
| | 600 | 60 | 81 |
| | 900 | 170 | 230 |
| | 1500 | 170 | 230 |
| | 2500 | 290 | 393 |
| 2 1/2 | 300 | 100 | 136 |
| | 600 | 100 | 136 |
| | 900 | 245 | 332 |
| | 1500 | 245 | 332 |
| | 2500 | 355 | 481 |
| 3 | 300 | 100 | 136 |
| | 600 | 100 | 136 |
| | 900 | 160 | 217 |
| | 1500 | 355 | 481 |
| | 2500 | 500 | 678 |

| Nominal Pipe Size-In | Flange Rating | Torque | |
|---|---|---|---|
| | | Ft-Lbs | N-m |
| 4 | 300 | 100 | 136 |
| | 600 | 160 | 217 |
| | 900 | 355 | 481 |
| | 1500 | 500 | 678 |
| | 2500 | 800 | 1085 |
| 6 | 300 | 100 | 136 |
| | 600 | 245 | 332 |
| | 900 | 355 | 481 |
| 8 | 300 | 160 | 217 |
| | 600 | 355 | 481 |
| | 900 | 680 | 922 |
| 10 | 300 | 245 | 332 |
| | 600 | 500 | 678 |
| | 900 | 680 | 922 |
| 12 | 300 | 355 | 481 |
| | 600 | 500 | 678 |
| | 900 | 680 | 922 |
| 14 | 300 | 355 | 481 |
| | 600 | 680 | 922 |
| 16 | 300 | 500 | 678 |
| | 600 | 800 | 1085 |
| 18 | 300 | 500 | 678 |
| | 600 | 1100 | 1491 |
| 20 | 300 | 500 | 678 |
| | 600 | 1100 | 1491 |
| 24 | 300 | 800 | 1085 |
| | 600 | 1400 | 1898 |

**Note:** Torque values are based on a nut factor, K = 0.20. Adjustment to the torque should be considered if the installation utilizes bolting/lubrication with a nut factor other than K= 0.2. The following expression may be used for correction:

Equation 1: $T_2 = (T_1/K_1)*K_2$ where $T_1$ and $K_1$ are the Fike default torque and nut factor values.


Copyright © Fike Corporation All Rights Reserved.
P/N 06-299-1-8 May, 2018 Specifications are subject to change without notice.