INSTALLATION AND MAINTENANCE INSTRUCTIONS

Forward Acting Flat Seat Rupture Disc Assemblies

Rupture Disc Model: Poly-SD

Holder Model: Poly-SD

WARNING

- Read these instructions carefully and completely before attempting to unpack, install or service the rupture disc and holder.
- Do not vent a rupture disc assembly to an area where it would endanger personnel.
- Install the rupture disc assembly in such a way that equipment in the area will not prevent rupture disc from opening or be damaged by system discharge.
- A baffle plate on the outlet end of vent piping does NOT necessarily prevent potentially dangerous discharge.
- Piping should be braced to absorb shock when the rupture disc ruptures.
- Install the enclosed DANGER sign in a conspicuous location near the zone of potential danger.
- Spiral wound gaskets are not suitable for size 2" (DN50) in ratings 900 to 2500 ANSI, or sizes 2" (DN50), 3" (DN80), 4" (DN100) in flange ratings JIS 30k, 40k, and 63k.
- If the rupture disc features a fluoropolymer liner, do not remove this component.
- For installations under a pressure relief valve, refer to Fike Technical Bulletin TB8105 for Code requirements and best practices.
- Use of an o-ring is for improved sealing and is not required for proper function of the rupture disc assembly. Do not install an o-ring unless the holder is designed to accept these components by Fike!

CE holders and rupture disc marking includes the CE logo, and standard "EN ISO 4126-2" and Fike Corporation Notified Body number.

EN ISO 4126-2

CE 0036

INSPECTION/PREPARATION

A. NEW RUPTURE DISCS

WARNING: Always handle the rupture disc with extreme caution. Handle the rupture disc by its edges only. Damage to the dome or seat area of the rupture disc may adversely affect the performance of the rupture disc. Read the rupture disc tag completely before installing to confirm that the size and type are correct for your system.

1. Carefully remove the rupture disc from its package container.
2. Remove and discard the shipping support (if provided) Shipping supports have ORANGE STICKERS on them - they are NOT a part of the rupture disc (See Figure 1).

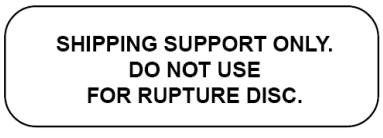

Figure 1 - Shipping Support Label

3. Inspect the rupture disc for damage. Look for dents, scratches or dings in the seat area or dents in the dome of the rupture disc (See Figure 2).



Figure 2 - Check for Damage

4. If foreign material is present, carefully clean the rupture disc with a solvent that is compatible with your media.

B. NEW HOLDER

1. Carefully take the rupture disc holder apart by removing the pre-assembly screws (or side clips) and discard the white shipping protector.
2. Inspect the seat area for scratches, dents, nicks or dirt. Flaws may adversely affect sealing and rupture disc burst pressure.
3. If necessary, clean dust or dirt on the seat area with a solvent that is compatible with your media.

C. EXISTING HOLDER

1. For insert style holders, carefully remove the rupture disc assembly from piping.
2. Separate rupture disc holder components.
3. Remove old rupture disc.
4. Inspect the seat area of the rupture disc holder. Look for scratches, nicks, corrosion or deposits left from the media.

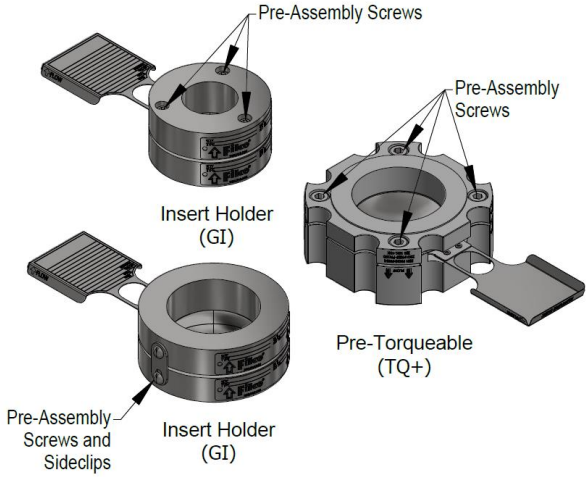

Figure 3 - Insert Holder and Pre-torqueable Holder (TQ+ & GI Configurations shown)

5. Check to make sure the gasket faces of the assembly are flat by placing a straight edge across the face. If faces are not flat, holder is not suitable for use (See Figure 4).



Figure 4 - Measuring the Flatness

6. If necessary, clean the seat area with a solvent that is compatible with your media. If this does not remove dirt, hand polish the seat area with ScotchBrite, fine emery cloth or #0000 steel wool. DO NOT MACHINE THE RUPTURE DISC HOLDER! If scratches, nicks, corrosion or deposits from the media cannot be removed by hand, contact the factory.

Copyright © Fike Corporation All Rights Reserved.

P/N 06-249-1 B, July 2026 Specifications are subject to change without notice.

ASSEMBLY (GI Holders Only)
WARNING: Before attempting to assemble the rupture disc and rupture disc holder, confirm that the seat area of the rupture disc is designed to fit the rupture disc holder.

1. If the holder was supplied with an optional o-ring groove, install an o-ring into the groove of the component with the female seat. Note: Use of an o-ring is for improved sealing and is not required for proper function of the rupture disc assembly. Do not install an o-ring unless the holder is designed to accept these components by Fike!
2. Place rupture disc into holder component with female seat with flow arrow on rupture disc tag pointing in the same direction as flow arrow on holder tag (See Figures 5 and 6).

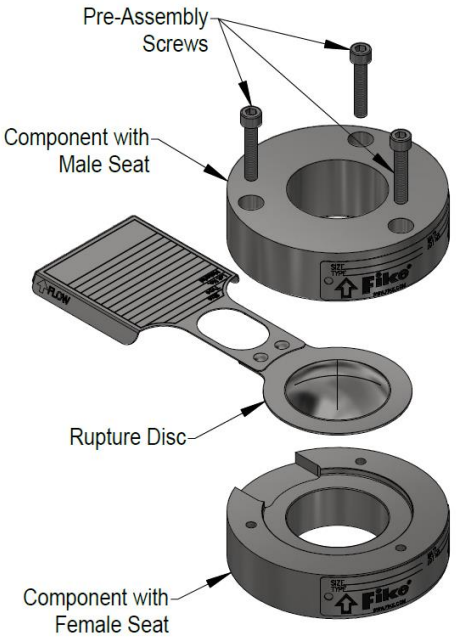

Figure 5 - Insert (GI) Holder w/ Pre-assembly Screws

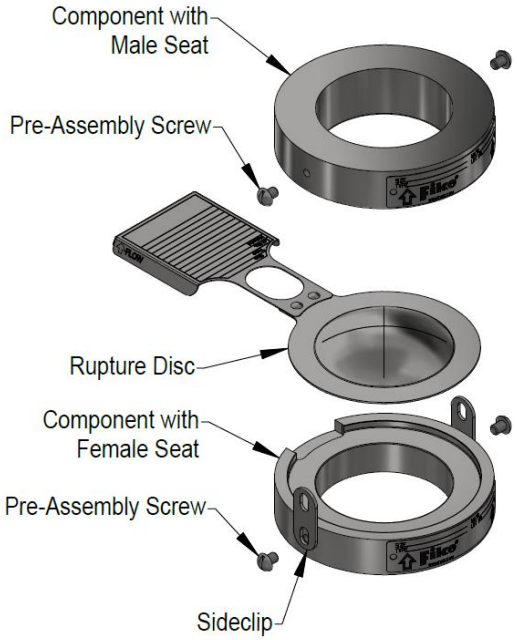

Figure 6 - Insert (GI) Holder w/ Pre-assembly Screws & Sideclips

3. Carefully place the holder component with the male seat on the rupture disc with flow arrow pointing in the direction of flow.
4. Insert the pre-assembly screws (or side clips) if provided.
5. Tighten pre-assembly screws until recessed and snug in the holder. DO NOT APPLY TORQUE TO PRE-ASSEMBLY SCREWS! Sealing pressure is applied with companion flange studs and nuts.
6. Proceed to **INSTALLATION** section.

ASSEMBLY (TQ & TQ+ Holders Only)
WARNING: Before attempting to assemble the rupture disc and rupture disc holder, confirm that the seat area of the rupture disc is designed to fit the rupture disc holder.

1. If the holder was supplied with an optional o-ring groove, install an o-ring into the groove of the component with the female seat. Note: Use of an o-ring is for improved sealing and is not required for proper function of the rupture disc assembly. Do not install an o-ring unless the holder is designed to accept these components by Fike!
2. Place rupture disc into holder component with female seat with flow arrow on rupture disc tag pointing in the same direction as flow arrow on holder tag (See Figures 7 and 8).

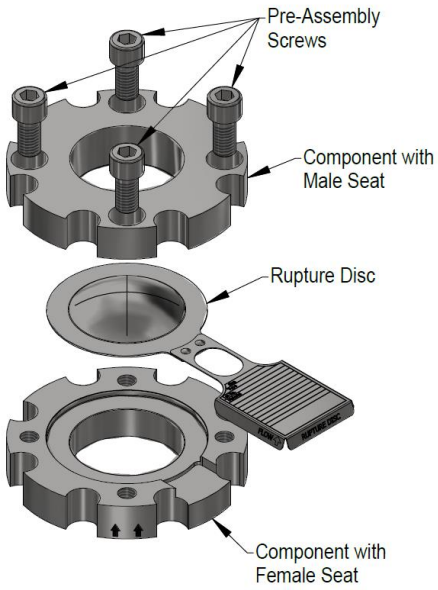

Figure 7 - Pre-torqueable (TQ) Holder

Copyright © Fike Corporation All Rights Reserved.

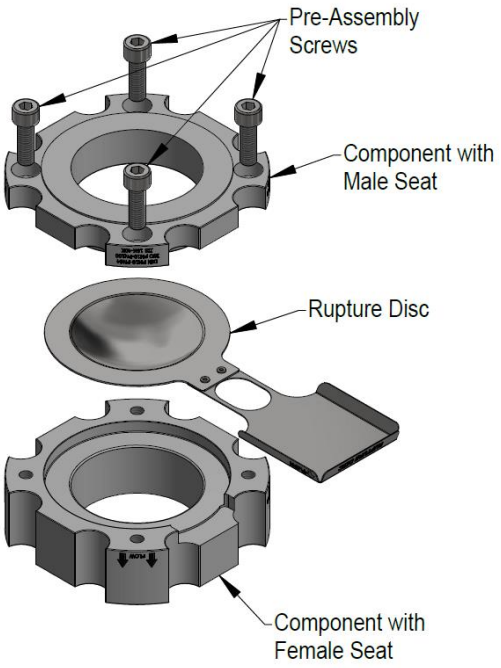

Figure 8 - Pre-torqueable (TQ+) Holder

3. Before installing the pre-assembly screws, lubricate the threads and the underside of the head with a light oil such as SAE grade 20.
4. Install pre-assembly screws and tighten until recessed and snug in the holder (approx. 50 in-lbs). Check the gap between the holddown and the base. The gap must be even around the circumference of the holder.
5. Torque the pre-assembly screws to values shown in Table 1 using a criss-cross pattern in 20% increments until the full torque is achieved on all pre-assembly screws. NOTE: Special design holders will have pre-assembly screw torque marked on the holder.

   NOTE: Follow the torque instructions in this document unless a specific torque requirement is stated on the Rupture Disc and/or Rupture Disc Holder Tag.

Table 1 - TQ & TQ+ Capscrew Torques

Capscrew Size	Torque	
	ft-lb	N-m
1/4”	4	5
5/16”	8	11
3/8”	12	16
7/16”	20	27
1/2”	30	41
5/8”	60	81
3/4”	100	136
7/8”	160	217
M8	10	14
M10	17	23
M12	29	39
M24	221	300

Note: Torque values are based on a nut factor, K = 0.20.

6. After recommended torque has been achieved, perform a final tightening in a clockwise bolt-to-bolt fashion to ensure that all capscrews have equal loading.
7. Proceed to **INSTALLATION** section.

Under normal operating conditions, the rupture disc should be replaced yearly. Severe operating conditions may require that the rupture disc be replaced more often.

INSTALLATION

Steps 1 and 2 for GI, TQ, & TQ+ holders only.

1. Place gaskets on top and bottom of assembly. Gaskets subject to relaxation or cold flow are not recommended.
2. Carefully slide rupture disc assembly between companion flanges. If dome of rupture disc extends beyond the holddown take extra caution when installing the rupture disc assembly.

WARNING: Double check the orientation of the rupture disc. Verify flow arrows on the holder and rupture disc tag are pointed in the same direction as process flow.

3. If necessary, clean threads on studs and nuts. Wire brushing is usually sufficient. For normal rupture disc installations, Fike recommends the use of SAE 20 oil as a fastener lubricant. Commercial thread lubricants are recommended whenever conditions warrant. These conditions include corrosive, marine and outdoor environments, service temperatures greater than 100°F (38°C), and with stainless steel on stainless steel threads. Do not use studs & nuts that show evidence of galling.
4. Finger-tighten flange bolt nuts.
5. Refer to Tables 2A & 2B to obtain torque value. Locate nominal disc size and flange rating of rupture disc assembly. Follow the row across until you reach the column where your rupture disc seal material is located. This is the required torque for your rupture disc assembly.
6. Using the crisscross pattern shown in Figure 7, apply torque in four steps of 25% increments. For example, if the torque required from Table 2 is 100 ft-lb, the torque should be applied in 25 ft-lb increments. Apply 25 ft-lb to each nut, then 50 ft-lb, then 75 ft-lb, etc.

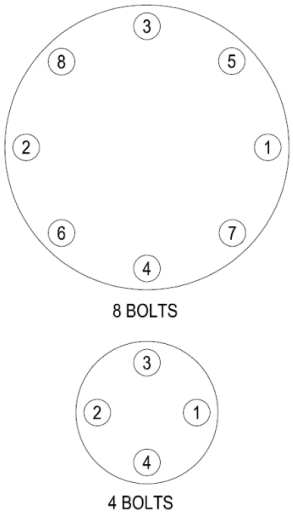

Figure 9 - Bolt Tightening Sequence

Copyright © Fike Corporation All Rights Reserved.

7. After the recommended torque has been achieved, perform a final tightening in a clock wise bolt-to-bolt fashion to ensure that all flange bolts have equal loading.
8. Experience has shown that in some installation conditions, it may be necessary to re-torque the flange bolting after the system has operated through normal pressure and temperature cycles.

NOTE: Rupture disc specifications are listed on the rupture disc tag.

Table 2A - Stud Torque

		Silver, Aluminum, Copper		SST, Inconel, Monel, Nickel, Hastelloy, Titanium, Tantalum	
Nominal Pipe Size-In	Flange Rating	Torque		Torque	
		Ft-Lbs	N-m	Ft-Lbs	N-m
1/2	150	2.4	3.3	10	14
	300	2.4	3.3	14	19
	600	2.4	3.3	14	19
	900	7.5	10	21	29
	1500	7.5	10	21	29
	2500	7.5	10	21	29
3/4	150	5.0	6.8	10	14
	300	6.3	8.5	20	27
	600	6.3	8.5	20	27
	900	15	20	61	83
	1500	15	20	61	83
	2500	15	20	61	83
1	150	13	17	26	35
	300	16	21	50	68
	600	16	21	63	85
	900	44	60	160	217
	1500	44	60	163	221
	2500	44	60	163	221
1 1/2	150	25	34	32	43
	300	75	101	93	126
	600	97	132	121	164
	900	201	273	251	341
	1500	201	273	251	341
	2500	269	365	337	456
2	150	46	62	58	78
	300	42	58	53	72
	600	55	75	69	94
	900	125	169	156	211
	1500	125	169	156	211
	2500	172	234	216	292
2 1/2	150	51	69	64	86
	300	72	98	90	122
	600	92	124	115	155
	900	185	250	231	313
	1500	185	250	231	313
	2500	251	340	314	425

Note: Torque values are based on a nut factor, K = 0.20. Adjustment to the torque should be considered if the installation utilizes bolting/lubrication with a nut factor other than K= 0.2. The following expression may be used for correction:

Equation 1: $T_2 = (T_1/K_1)*K_2$ where T_1 and K_1 are the Fike default torque and nut factor values.

Table 2B -- Stud Torque

		Silver, Aluminum, Copper		SST, Inconel, Monel, Nickel, Hastelloy, Titanium, Tantalum	
Nominal Pipe Size-In	Flange Rating	Torque		Torque	
		Ft-Lbs	N-m	Ft-Lbs	N-m
3	150	56	76	70	94
	300	78	106	98	133
	600	100	135	124	169
	900	139	189	174	236
	1500	256	347	320	434
	2500	339	460	424	575
3 1/2	150	46	62	57	77
	300	84	113	104	142
	600	150	204	188	255
4	150	47	64	59	80
	300	89	121	111	151
	600	150	204	188	255
	900	270	366	337	458
	1500	355	481	443	601
	2500	579	785	724	982
6	150	87	118	109	147
	300	93	127	117	158
	600	181	246	226	307
	900	247	335	309	418
	1500	429	581	536	727
	2500	1319	1788	1649	2235
8	150	98	133	123	167
	300	144	195	179	243
	600	261	354	327	443
	900	446	605	558	757
10	150	127	173	182	247
	300	187	253	234	317
	600	336	456	420	570
	900	437	592	546	740
12	150	140	190	195	264
	300	266	361	333	451
	600	332	450	415	563
	900	432	586	540	732
14	150	188	255	235	319
	300	247	335	309	419
	600	429	581	536	727
16	150	190	258	238	322
	300	334	453	418	566
	600	555	752	694	940
18	150	268	363	334	454
	300	325	440	406	550
	600	703	953	879	1191
20	150	254	344	317	430
	300	327	443	409	554
	600	689	934	861	1168
24	150	355	481	444	601
	300	562	762	702	952
	600	1061	1439	1326	1798

Note: Torque values are based on a nut factor, K = 0.20. Adjustment to the torque should be considered if the installation utilizes bolting/lubrication with a nut factor other than K= 0.2. The following expression may be used for correction:

Equation 1: $T_2 = (T_1/K_1)*K_2$ where T_1 and K_1 are the Fike default torque and nut factor values.

Copyright © Fike Corporation All Rights Reserved.
P/N 06-249-1 B, July 2026 Specifications are subject to change without notice.

OPERATING TEMPERATURE DERATING

The safe operating pressure at elevated temperature will vary with type of holder material and pressure class, and will be reduced as the temperature increases at a value consistent with the flanges of the same material as installed, according to the applicable flange standard (ASME B16.5, EN1092-1, JIS B2220). This ensures safe operation consistent with the flange pressure calculation for the system in which the rupture disc holder is installed.

EXAMPLE: (*will vary by material and rating*)

ASME B16.5 Pressure-Temperature Ratings for Group 2.2 material, F316 A182 Forging Class 150	
Temp °F	**Working Pressure (PSIG)**
-20 to 100	275
200	235
300	215
400	195
500	170
600	140
700	110
800	80
900	50
1000	20

Copyright © Fike Corporation All Rights Reserved.