INSTALLATION AND MAINTENANCE INSTRUCTIONS

30° Seat RD Assemblies

Composite: P, CPV, PV, CP, CPV-C, CPC, HO, HOV, PLHO, PLHOV

Scored: SCRD, SCRD-V

Holder Model: Conventional

06-245-1

WARNING

- Read these instructions carefully and completely before attempting to unpack, install or service the rupture disc and holder.
- Do not vent a rupture disc assembly to an area where it would endanger personnel.
- Install the rupture disc assembly in such a way that equipment in the area will not prevent rupture disc from opening or be damaged by system discharge.
- A baffle plate on the outlet end of vent piping does NOT necessarily prevent potentially dangerous discharge.
- Piping should be braced to absorb shock when the rupture disc ruptures.
- Install the enclosed DANGER sign in a conspicuous location near the zone of potential danger.
- Spiral wound gaskets are not generally recommended.
- Spiral wound gaskets are not suitable for size 2” (DN50) in flange ratings 900-2500 ANSI, or sizes 2” (DN50), 3” (DN80), 4” (DN100) in flange ratings JIS 30k, 40k, 63k.
- If the rupture disc features a fluoropolymer liner, do not remove this component.
- For installations under a pressure relief valve, refer to Fike Technical Bulletin TB8105 for code requirements and best practices.

CE holders and rupture disc marking includes the CE logo, and standard “EN ISO 4126-2” and Fike Corporation Notified Body number.

EN ISO 4126-2

CE 0036

INSTALLATION

A. New Rupture Discs

WARNING: Always handle the rupture disc with extreme caution. Handle the rupture disc by its edges only. Damage to the dome or seat area of the rupture disc may adversely affect the performance of the rupture disc. Read the rupture disc tag completely before installing to confirm that the size and type are correct for your system.

1. Carefully remove the rupture disc from its packaging container.
2. Remove and discard the shipping support (if provided). Shipping supports have ORANGE STICKERS on them, - they are NOT a part of the rupture disc (See Figure 1).

SHIPPING SUPPORT ONLY.
DO NOT USE
FOR RUPTURE DISC.

Figure 1 - Shipping Support Sticker

PLHO and PLHOV users: DO NOT discard the clear plastic that is attached to the tag. It is a component of the disc.

3. Inspect the rupture disc for damage. Look for dents, scratches or dings in the seat area or dents in the dome of the rupture disc (See Figure 2).

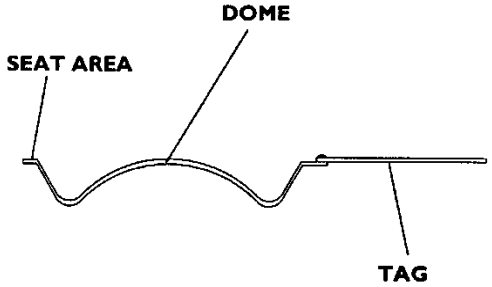

Figure 2 - Rupture Disc

4. If foreign material is present, carefully clean the rupture disc with a solvent that is compatible with your media.

B. New Holder

1. Carefully take the rupture disc holder apart by removing the pre-assembly screws (or side clips) and discard the white shipping protector.
2. Inspect the seat area for scratches, dents, nicks or dirt. Flaws may adversely affect sealing and disc burst pressure.
3. If necessary, clean dust or dirt on the seat area with a solvent that is compatible with your media.

C. Existing Holder

1. For insert style holders, carefully remove the rupture disc assembly from piping.
2. Separate rupture disc holder components (See Figure 3).

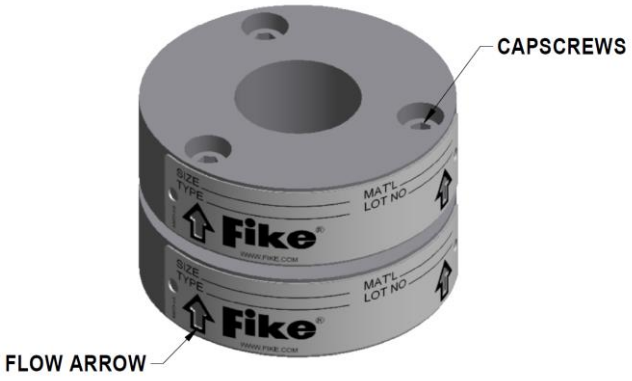

Figure 3 - Rupture Disc Holder

3. Remove the rupture disc from its holder and discard.
4. Inspect the seat area of the rupture disc holder. Look for scratches, nicks, corrosion or deposits left from the media.

5. Check to make sure the gasket faces of the assembly are flat by placing a straight edge across the face. If faces are not flat, holder is not suitable for use (See Figure 4).



Figure 4 - Measuring for Flatness

6. If necessary, clean the seat area with a solvent that is compatible with your media. If this does not remove dirt, hand polish the seat area with ScotchBrite™, fine emery cloth or #0000 steel wool. DO NOT MACHINE THE RUPTURE DISC HOLDER! If scratches, nicks, corrosion or deposits from the media cannot be removed by hand, contact the factory.

ASSEMBLY

WARNING: Before attempting to assemble the rupture disc and rupture disc holder, confirm that the seat area of the rupture disc is designed to fit the rupture disc holder.

1. Place new rupture disc in base of the rupture disc holder with tag labeled “vent side” pointing in the same direction as base flow arrow (See Figure 5).

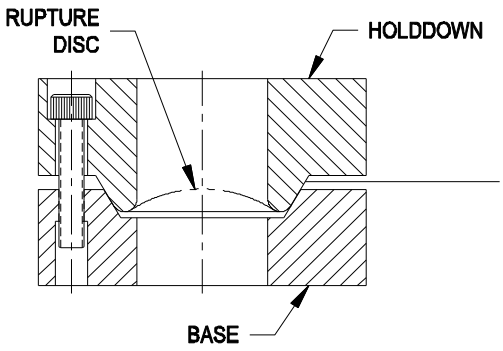

Figure 5 - Insert Style Holder

2. Carefully place the holddown on the rupture disc with flow arrow pointing in the direction of flow.
3. Insert the pre-assembly screws (or side clips if provided).
4. Tighten pre-assembly screws until recessed and snug in the holder. DO NOT APPLY TORQUE TO PREASSEMBLY SCREWS! Sealing pressure is applied with companion flange studs and nuts.
5. Check gap between base and holddown. The gap should be the same size on all sides of the assembly. (Approximately 1/8” to 3/16”.) This can be assured by measuring the distance between the holddown and base at various places around the circumference of the assembly. If the gap is not even, disassemble and carefully inspect all parts. Disc damage may have occurred. Adjust pre-assembly screws if necessary to provide an even gap (See Figure 6).

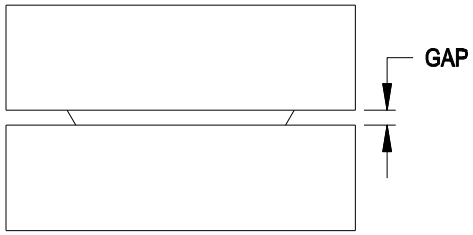

Figure 6 - Gap Inspection

INSTALLATION

Steps 1 and 2 for insert style holders only.

1. Place gaskets on top and bottom of assembly. Gaskets subject to relaxation or cold flow are not recommended.
2. Carefully slide rupture disc assembly between companion flanges. If dome of rupture disc extends beyond the holddown take extra caution when installing the rupture disc assembly.

WARNING: Double check the orientation of the rupture disc. The rupture disc tag labeled “vent side” should be on the down stream flow side of the disc assembly.

3. If necessary, clean threads on studs and nuts. Wire brushing is usually sufficient. Oil studs with a light oil; such as SAE grade 20 engine oil. Do not use studs & nuts that show evidence of galling.
4. Finger tighten flange bolt nuts. Check gap between base and holddown to ensure that it is still equal around the assembly.
5. Refer to attached Table 1 to obtain torque value. Locate nominal disc size and flange class rating of rupture disc assembly. Follow the row across until you reach the column where your type of disc is located. This is the required torque in ft-lb for your rupture disc assembly.

6. Using the crisscross pattern shown in Figure 7, apply torque in 4 steps of 25% increments. For example, if the torque required from Table 1 is 100 ft-lb, the torque should be applied in 25 ft-lb increments. Apply 25 ft-lb to each nut, then 50 ft-lb, then 75 ft-lb, etc.

   NOTE: Follow the torque instructions in this document unless a specific torque requirement is stated on the Rupture Disc and/or Rupture Disc Holder Tag.

Check gap between base and holddown (see Fig. 6) after each torque step. Maintain an equal distance between companion flange faces on all sides.

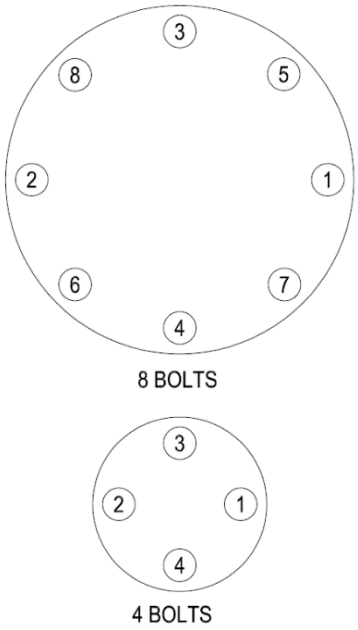

Figure 7 - Bolt Tightening Sequence

7. After recommended torque has been achieved, perform a final tightening in a clockwise bolt-to-bolt fashion to ensure that all studs have equal loading.
8. Experience has shown that, in some installation conditions, it may be necessary to re-torque the flange bolting after the system has operated through normal pressure and temperature cycles.

Under normal operation conditions, the rupture disc should be replaced yearly. Severe operating conditions may require that the rupture disc be replaced more often.

OPERATING TEMPERATURE DERATING

The safe operating pressure at elevated temperature will vary with type of holder material and pressure class, and will be reduced as the temperature increases at a value consistent with the flanges of the same material as installed, according to the applicable flange standard (ASME B16.5, EN1092-1, JIS B2220). This ensures safe operation consistent with the flange pressure calculation for the system in which the rupture disc holder is installed.

EXAMPLE: (*will vary by material and rating*)

ASME B16.5 Pressure-Temperature Ratings for Group 2.2 material, F316 A182 Forging Class 150	
Temp °F	**Working Pressure (PSIG)**
-20 to 100	275
200	235
300	215
400	195
500	170
600	140
700	110
800	80
900	50
1000	20

Table 1 - Torque Values

Nominal Pipe Size Inches	Flange Class Rating	Solid Disc		Solid Disc w/ Coating		Soft Disc, Soft Disc w/ Coating, or Fluoropolymer Seal	
		ft-lb	N-m	ft-lb	N-m	ft-lb	N-m
1/2	150	5	6	9	12	2	3
	300	5	6	9	12	2	3
	600	5	6	9	12	2	3
	900	33	44	34	46	17	22
	1500	33	44	34	46	17	22
3/4	150	14	18	16	22	7	9
	300	17	23	20	27	9	12
	600	17	23	20	27	9	12
	900	85	115	86	117	43	58
	1500	85	115	86	117	43	58
1	150	18	25	25	34	9	12
	300	23	31	31	42	11	16
	600	23	31	31	42	11	16
	900	88	120	113	154	44	60
	1500	88	120	113	154	44	60
1 1/2	150	24	32	31	42	12	16
	300	36	49	46	62	18	25
	600	39	53	48	64	20	27
	900	139	188	200	272	70	94
	1500	193	262	200	272	97	131
2	150	91	123	97	132	45	61
	300	45	61	49	66	23	31
2 Light Lip	600	45	61	49	66	23	31
2 Heavy Lip	600	63	85	100	135	31	42
2	900	182	247	186	252	91	124
	1500	182	247	186	252	91	124
3	150	80	109	87	118	40	54
	300	73	99	80	108	37	50
	600	83	113	85	115	42	57
	900	146	198	204	277	73	99
	1500	260	353	300	407	130	176

Solid Disc Types

Seals: Hastelloy (C-276), Titanium (Ti) Tantalum (Ta), 316 SST, Inconel, Monel, Nickel (Ni)
Liners: Fluoropolymer (FEP and PFA), Lead (Pb)
Plating: Gold (Au)

Solid Disc Types w/ Coating

Seals: Hastelloy (C-276), Titanium (Ti) Tantalum (Ta), 316 SST, Inconel, Monel, Nickel (Ni)
Coating: Teflon (FEP), Polyurethane

Soft Disc Types

Seals: Silver (Ag), Gold (Au), Aluminum (Al), Fluoropolymer (FEP and PFA)
Liners: Fluoropolymer (FEP and PFA)
Coatings: Teflon (FEP), Polyurethane

NOTE: Rupture disc specifications and year of manufacture can be found on the rupture disc tag.

NOTE: Torque values in Table 1 are based on a nut factor K= 0.2. Adjustment to the torque should be considered if the installation utilizes bolting/lubrication with a nut factor other than K= 0.2. The following expression may be used for correction:

Equation 1: $T_2 = (T_1/K_1)*K_2$ where T_1 and K_1 are the Fike default torque and nut factor values.

Table 1 Continued - Torque Values

Nominal Pipe Size Inches	Flange Class Rating	Solid Disc		Solid Disc w/ Coating		Soft Disc, Soft Disc w/ Coating, or Fluoropolymer Seal	
		ft-lb	N-m	ft-lb	N-m	ft-lb	N-m
4	150	60	81	100	136	30	41
	300	72	98	120	163	36	49
	600	125	169	161	218	62	85
	900	349	473	434	588	175	237
	1500	490	664	531	720	245	332
6	150	92	124	144	195	46	62
	300	61	83	96	130	31	42
	600	138	188	156	211	69	94
	900	450	610	459	623	225	305
8	150	214	290	272	369	107	145
	300	166	226	211	287	83	113
	600	300	407	314	426	150	203
10	150	210	285	255	346	105	143
	300	180	244	219	297	90	122
	600	225	305	273	371	113	153
12	150	241	326	281	381	120	163
	300	232	315	271	367	116	157
	600	206	280	241	326	103	140
14	150	317	429	353	478	158	215
	300	214	290	238	323	107	145
16	150	270	366	294	398	135	184
	300	270	366	294	398	135	184
18	150	290	393	373	505	145	197
	300	214	291	276	374	108	146
20	150	255	346	350	474	128	173
	300	314	426	364	493	157	213
24	150	335	455	459	623	168	227
	300	507	688	545	739	254	345

Solid DiscTypes

Seals: Hastelloy (C-276), Titanium (Ti) Tantalum (Ta), 316 SST, Inconel, Monel, Nickel (Ni)
Liners: Fluoropolymer (FEP and PFA), Lead (Pb)
Plating: Gold (Au)

Solid Disc Types w/ Coating

Seals: Hastelloy (C-276), Titanium (Ti) Tantalum (Ta), 316 SST, Inconel, Monel, Nickel (Ni)
Coating: Teflon (FEP), Polyurethane

Soft Disc TypesSoft Disc Types

Seals: Silver (Ag), Gold (Au), Aluminum (Al), Fluoropolymer (FEP and PFA)
Liners: Fluoropolymer (FEP and PFA)
Coatings: Teflon (FEP), Polyurethane

NOTE: Rupture disc specifications and year of manufacture can be found on the rupture disc tag.

NOTE: Torque values in Table 1 are based on a nut factor K= 0.2. Adjustment to the torque should be considered if the installation utilizes bolting/lubrication with a nut factor other than K= 0.2. The following expression may be used for correction:

Equation 1: $T_2 = (T_1/K_1)*K_2$ where T_1 and K_1 are the Fike default torque and nut factor values.

Copyright © Fike Corporation All Rights Reserved.