PRODUCT MANUAL

# PC Link HLI

## MODBUS PROTOCOL

## P/N 68-517




P/N 06-823
Rev. 1

Fike®

SOLUTIONS

- Fire Protection
- Explosion Protection
- Overpressure Protection
- Pressure Activation

## COPYRIGHT INFORMATION

Copyright © 2016. All rights reserved.

This document may not be reproduced, in whole or in part, by any means without the prior written consent of Fike. All Fike documentation and hardware are copyrighted with all rights reserved.

## TRADEMARKS

Fike®, Precise Vision™, Cheetah® Xi and CyberCat® are registered trademarks of Fike. All other trademarks, trade names or company names referenced herein are the property of their respective owners.

## ERRORS AND OMMISSIONS

While every precaution has been taken during the preparation of this document to ensure the accuracy of its content, Fike assumes no responsibility whatsoever for errors or omissions.

Fike reserves the right to change product designs or specifications without obligation and without further notice in accordance with our policy of continuing product and system improvement.

## READER QUESTIONS AND RESPONSES

If you have any questions regarding the information contained in this document, or if you have any other inquiries regarding Fike products, please call Fike's Customer Support Department at (800)-979-FIKE (3453), option 21.

Fike encourages input from our distributors and end users on how we can improve this manual and even the product itself. Please direct all calls of this nature to Fike's Customer Support Department at (800)-979-FIKE (3453), option 21. Any communication received becomes the property of Fike.

## TERMS AND CONDITIONS OF SALE

Because of the many and varied circumstances and extreme condition under which Fike's products are used, and because Fike has no control over this actual use, Fike makes no warranties based on the contents of this document. FIKE MAKES NO IMPLIED WARRANTIES OF MERCHANTABILITY OR FITNESS FOR A SPECIFIC PURPOSE. Refer to www.fike.com/terms-conditions for Fike's full TERMS AND CONDITIONS OF SALE.

## TERMS OF USE

Do not alter, modify, copy, or otherwise misappropriate any Fike product, whether in whole or in part. Fike assumes no responsibility for any losses incurred by you or third parties arising from such alteration, modification, copy or otherwise misappropriation of Fike products.

Do not use any Fike products for any application for which it is not intended. Fike shall not be in any way liable for any damages or losses incurred by you or third parties arising from the use of any Fike product for which the product is not intended by Fike.

You should install and use the Fike products described in this document within the range specified by Fike, especially with respect to the product application, maximum ratings, operating supply voltage range, installation and other product characteristics. Fike shall have no liability for malfunctions or damages arising out of the use of Fike products beyond such specified ranges.

You should install and use the Fike products described in this document in compliance with all applicable laws, standards, and regulations. Fike assumes no liability for damages or losses occurring as a result of your noncompliance with applicable laws and regulations.

It is the responsibility of the buyer or distributor of Fike products, who distributes, disposes of, or otherwise places the product with a third party, to notify such third party in advance of the contents and conditions set forth in this document. Fike assumes no responsibility for any losses incurred by you or third parties as a result of unauthorized use of Fike products.

## QUALITY NOTICE

Fike has maintained ISO 9001 certification since 1996. Prior to shipment, we thoroughly test our products and review our documentation to assure the highest quality in all respects.

# REVISION HISTORY

| REVISION / DESCRIPTION OF CHANGE | REVISION DATE |
|---|---|
| ORIGINAL RELEASE | OCTOBER, 2016 |
| REV 1 – ADDED VES DETECTOR | MARCH, 2020 |

# TABLE OF CONTENTS

**Section** **Page No.**


1. About This Manual ..... 1
   1.1. Product Support ..... 1
   1.2. Related Documentation ..... 1
   1.3. Terms Used in This Manual ..... 2
   1.4. Symbols Used in This Manual ..... 3
   1.5. Safety Notices ..... 3
2. Product Overview ..... 4
   2.1. Compatibility ..... 4
   2.2. Ordering Information ..... 4
   2.3. PC Link HLI Enclosure Physical Specifications ..... 5
   2.4. Electrical Specifications ..... 6
3. Installation ..... 7
   3.1. Mounting ..... 7
   3.2. Enclosure Installation ..... 7
   3.3. HLI Connection to Control Panel ..... 8
   3.4. VESDAnet ..... 10
      3.4.1. VESDAnet Wiring ..... 11
      3.4.2. VESDA Power ..... 11
4. Configuration ..... 12
   4.1. VESDA Detector Configuration ..... 12
   4.2. Control Panel Configuration ..... 12
      4.2.1. Configuration Menu 4 ..... 12
      4.2.2. F2 – VESDA ..... 12
      4.2.3. PC Link Modbus HLI Configuration ..... 13
         4.2.3.1. F1 – Detector Configuration ..... 14
         4.2.3.2. F2 – Sectors and Pipes ..... 15
         4.2.3.3. F3 – Templates ..... 16
         4.2.3.4. F4 – Annunciation ..... 17
            4.2.3.4.1. F1 – Sector Messages ..... 18
            4.2.3.4.2. F2 – DACT Supervisory Annunciation ..... 18
         4.2.3.5. F5 – HLI ..... 19
         4.2.3.6. F6 – Release Features ..... 20
5. Operation ..... 21
   5.1. Alarm on VESDA Fire-1 ..... 21
      5.1.1. DACT Annunciation ..... 22
   5.2. Supervisory on VESDA Fire-1 ..... 22
   5.3. Silence & Acknowledge Switches ..... 23
   5.4. Reset Switch ..... 23
   5.5. VESDA Virtual Address ..... 23
   5.6. VESDA Participation In Panel's Positive Alarm Sequence Operation ..... 23

# TABLE OF CONTENTS

**Section** **Page No.**


6. Panel Event Display ..... 24
   6.1. Alarm Event ..... 24
      6.1.1. Alarm Clearing Event ..... 25
      6.1.2. Sector Alarm Event ..... 25
      6.1.3. Sector Alarm Clearing Event ..... 26
   6.2. Trouble Event ..... 27
      6.2.1. Trouble Clearing Event ..... 27
7. Diagnostics ..... 28
   7.1. Diagnostics Menu 2 ..... 28
      7.1.1. F2 – VESDA 1 Diagnostics ..... 29
      7.1.2. F3 – VESDA 2 Diagnostics ..... 30
      7.1.3. F5 – VESDAnet Communications ..... 31

Appendix 1 - Cheetah Xi and CyberCat VESDA Event Messages ..... 32

Appendix 2 – HLI Fault List ..... 36

# LIST OF FIGURES

## Figures Page No.


Figure 1 – Fike PC Link HLI Assembly ..... 4
Figure 2 – PC Link HLI Enclosure ..... 5
Figure 3 – PC Link Modbus HLI Wiring Diagram ..... 6
Figure 4 – PC Link Modbus HLI Enclosure Installation ..... 7
Figure 5 – Cheetah Xi and CyberCat HLI Wiring Diagram ..... 8
Figure 6 – Cheetah Xi 50 and CyberCat 50 HLI Wiring Diagram ..... 9
Figure 7 – VESDAnet Example ..... 10
Figure 8 – VESDAnet “Closed” Loop ..... 11
Figure 9 – Configuration Menu 4 ..... 12
Figure 10 – VESDA HLI Protocol Screen ..... 12
Figure 11 – Modbus HLI Configuration Menu ..... 13
Figure 12 – Detector Configuration Screen ..... 14
Figure 13 – Sectors and Pipes Screen ..... 15
Figure 14 – Sectors and Pipes Screen ..... 16
Figure 15 – Templates Screen ..... 16
Figure 16 – VESDA Annunciation Screen ..... 17
Figure 17 – Sector Message Screen ..... 18
Figure 18 – VESDA-DACT Annunciation Screen ..... 18
Figure 19 – HLI Type Screen ..... 18
Figure 20 – Release Features Screen ..... 20
Figure 21 – Alarm Event Screen ..... 24
Figure 22 – Alarm Event Clear Screen ..... 25
Figure 23 – Sector Alarm Event Screen ..... 25
Figure 24 – Sector Alarm Event Clear Screen ..... 26
Figure 25 – Trouble Event Screen ..... 27
Figure 26 – Trouble Event Clear Screen ..... 27
Figure 27 – Diagnostic Menu 2 Screen ..... 28
Figure 28 – VESDA 1 Diagnostics Screen ..... 29
Figure 29 – VESDA 2 Diagnostics Screen ..... 30
Figure 30 – VESDA Communication Screen ..... 31

# 1. ABOUT THIS MANUAL

This manual is intended to be a reference for the installation and operation of the Fike PC Link High Level Interface (HLI) module. The information contained in this manual must be utilized by the factory trained Fike distributor in order to properly install and test the device to ensure proper operation. This manual is not designed to be a full Operations Manual for the end user.

Before you refer to any section in this manual, and before you attempt to install or use the HLI, be sure to read the important safety notices in Section 1.5.

This manual is divided into sections for easy reference. The first-time installer and/or user should thoroughly read and understand the instructions contained within this manual before using this device. These instructions must be followed to avoid possible damage or adverse operating conditions caused by improper installation, wiring and/or programming.

## 1.1. Product Support

If you have a question or encounter a problem not covered in this manual, you should first try to contact the distributor that installed the protection system. Fike has a worldwide distribution network. Each distributor sells, installs, and services Fike equipment. Look on the inside of the door, left side, there should be a sticker with an indication of the distributor who sold the system. If you cannot locate the distributor, please call Fike Customer Service at (800) 979-FIKE (3453) for locating your nearest distributor, or go to our web-site at www.fike.com.

## 1.2. Related Documentation

To obtain a complete understanding of the specific features and functions of the Fike PC Link Modbus HLI or to become familiar with the compatible VESDA detectors, refer to the documentation listed below. Please reference the most current version or the version noted on the label located on the product.

| Document Title | Part Number |
|---|---|
| Cheetah Installation, Operation and Maintenance Manual | 06-148 |
| CyberCat (254/1016) Addressable Fire Alarm Installation Manual | 06-326 |
| Cheetah Xi Addressable Fire Suppression Installation Manual | 06-356 |
| CyberCat 50 Addressable Fire Alarm Installation Manual | 06-368 |
| Cheetah Xi 50 Addressable Fire Suppression Installation Manual | 06-369 |
| VESDA LaserCOMPACT Product Guide - Xtralis Part No. | 18938 |
| VESDA LaserPLUS Product Guide – Xtralis Part No. | 19145 |
| VESDA LaserSCANNER Product Guide – Xtralis Part No. | 19147 |
| VESDA LaserFocus Product Guide (VLF250) – Xtralis Part No. | 20295 |
| VESDA LaserFocus Product Guide (VLF 500) – Xtralis Part No. | 20297 |
| VESDA-E VEU Product Guide – Xtralis Part No. | 30275/30334 |
| VESDA-E VEA Product Guide – Xtralis Part No. | 30626/30627 |
| VESDA-E VEP Product Guide – Xtralis Part No. | 30311 |
| VESDA-E VES–A10-P Product Guide – Xtralis Part No. | 35030 |
| VESDA-E VES–A00-P Product Guide – Xtralis Part No | 33830 |
| VESDA VLI Product Guide – Xtralis Part No. | 29674 |
| VESDA VFT Product Guide – Xtralis Part No. | 29318 |

## 1.3. Terms Used in This Manual

The following are various terms used in this manual with a brief description of each:

Ω - Symbol for “ohm”. Unit of resistance.

**Alarm State** - (Panel “Alarm” Red LED ON, Piezo pulsing) The alarm occurs when an input circuit configured for alarm operation has been activated. Activation typically initiated by a detector or contact device.

**Minor Fault** - (VESDA detector event) A fault has occurred that should be rectified as soon as is practical.

**Normal State** - (Panel “Trouble” Yellow LED OFF) The system is in the normal state when the power supply and all circuits are configured properly, connected, and responding properly. The system remains in normal state until a trouble condition occurs.

**Non Power-Limited** - A circuit designation given for wiring purposes. The amount of current flowing through the circuit is unlimited vs. being limited, or power-limited. AC power and Battery wiring is Non Power-limited.

**Pipe** – The space protected by one tube to one sample point connected directly to a VESDA-E VEA detector.

**Power-Limited** - A circuit designation given for wiring purposes. The amount of current flowing through the circuit is limited (typically by fuse) vs. being unlimited, or non-power-limited. The SHP Pro input and output circuits are power-limited. The circuit has a maximum power that flows through it or it current limits and opens the circuit.

**Predischarge State** - (Panel “Alarm” Red LED ON, Piezo pulsing) The Predischarge state occurs when the zone’s detection type input conditions are satisfied (Cross Zone Detection, Sequential Alarm Detection, or Single Detector Release). Upon time delay countdown completion (unless delayed by a pertinent activated abort input), the system leaves the Predischarge state and enters the release state.

**Release State** - (Panel “Alarm” Red LED ON, Piezo pulsing) The release state occurs upon completion of the Predischarge state or upon activation of a manual release input. At the start of the release state, output circuits configured for releasing shall operate. (Not applicable to CyberCat).

**Sector** – The space protected by one pipe connection to a VESDA VLS, VFT-15 or VEA detector.

**Urgent Fault** – (VESDA detector event) A serious fault condition has occurred that requires immediate attention.

**VESDAnet** – A proprietary network protocol allowing bidirectional communications between Xtralis VESDA family of products.

**Zone (VESDA)** – The basic address for VESDAnet protocol [1 – 246] into which a detector, relay and display devices can be programmed. A VESDA zone includes the space protected by one Xtralis detector. This includes all sectors and pipes connected to this single detector.

**Zone (Cheetah Xi and CyberCat)** - A defined grouping of addressable input and output devices from which signals can be sent and output controls can be executed.

## 1.4. Symbols Used in This Manual

The following cautions and warnings appear in this manual. Be certain to read all of the following warning and cautions before attempting to install or use this device. Personal injury or accidental release of the suppression system may result if these warnings and cautions are not followed.

**WARNING:** This symbol is used in this manual to warn of possible injury or death from improper use or application of the product under noted conditions.

**CAUTION:** Cautions are used to indicate the presence of a hazard which will or may cause damage to the equipment if safety instructions are not followed or if the hazard is not avoided.

**NOTE:** Provides information on installation, operation, maintenance, performance or general tips that are important but not hazardous to anything or anyone.

## 1.5. Safety Notices

Be certain to read all the following warnings and cautions before installing or using this device. Accidental damage to the device could result if these warnings and cautions are not heeded!

**WARNING:** Failure to disconnect power to the releasing circuit(s) and completely disarm the solenoid(s) or any other "critical operation" contacts prior to system testing may cause accidental activation of the system.

**CAUTION:** To ensure proper system operation after installation of the Fike Modbus HLI, this device must be tested in accordance with NFPA 72. Re-acceptance testing is required after any change, addition or deletion of system components, or after any modification, repair or adjustment to system hardware or wiring.

**CAUTION:** The Fike Modbus HLI contains static sensitive components. Handle the electronics by the edges only and avoid touching the integrated components. Keep the electronics in the protective static bags it was shipped in until time for installation. Always ground yourself with a proper wrist strap before handling the module(s). If the installer is properly grounded at all times, damage due to static discharge will not occur. If the module requires repair or return to Fike, it must be shipped in an anti-static bag.

# 2. PRODUCT OVERVIEW

The Fike PC Link High Level Interface (HLI), P/N 68-517 is used to intelligently link VESDA devices connected to the VESDAnet with Fike's Cheetah Xi and CyberCat control panels. A single HLI can be connected to the host control panel via its RS232 connection. Through this connection, the HLI will transmit all VESDAnet events (e.g., current airflow status, smoke level status, fault status, etc.) intelligently to the control panel where it will be displayed. The panel will respond to the VESDA events based on system programming. Refer to Section 5 for panel operation.




**Figure 1 – Fike PC Link HLI Assembly**

The Fike PC Link HLI (Figure 1) is sold as an assembly that consists of the following components:

- Steel enclosure with cover, painted grey (not shown)
- Printed carrier circuit board with PC Link Modbus HLI attached
- Communication cable, HLI to host control panel

## 2.1. Compatibility

The PC Link (Modbus) HLI is compatible with Cheetah Xi and CyberCat panels equipped with Firmware version 7.20 or greater and can communication with VESDA detector models VLP, VLS, VLC, VLF, VLI, VFT and the new generation VESDA-E detector models VES, VEU, VEP, and VEA on the same VESDAnet. The Modbus HLI interface allows up to 100 VESDA / VESDA-E detectors connected to a common VESDAnet to be monitored by the Cheetah Xi or CyberCat panels and still meet the device response time requirements set forth by UL standard 864 and NFPA 72.

**NOTE:** Cheetah Xi and CyberCat panels, with firmware versions older than 7.20, must use the older version HLI (P/N 68-023) for proper communication. Refer to Fike document 06-158 for additional information.

## 2.2. Ordering Information

| Part Number | Description |
|---|---|
| 68-517 | Fike PC Link High Level Interface (HLI) Assembly |
| 10-2946 | HLI Printed Circuit Board Assembly (included in 68-517) |
| VHX-0420-FIK | PC Link HLI (included in 10-2946) |
| 02-4551 | HLI Enclosure, Grey (included in 68-517) |
| 02-15802 | HLI (RS232) Serial Interface Cable (included in 68-517), 4 conductor, 20 ft. (6.1 m) |

## 2.3. PC Link HLI Enclosure Physical Specifications

- Formed from 16 gauge, low carbon steel
- Grey polyester powder coated finish
- Concentric knockouts all four sides
- Keyhole slotted cover plate
- Weight: 6.8 lbs. (3.08 kg), with electronics

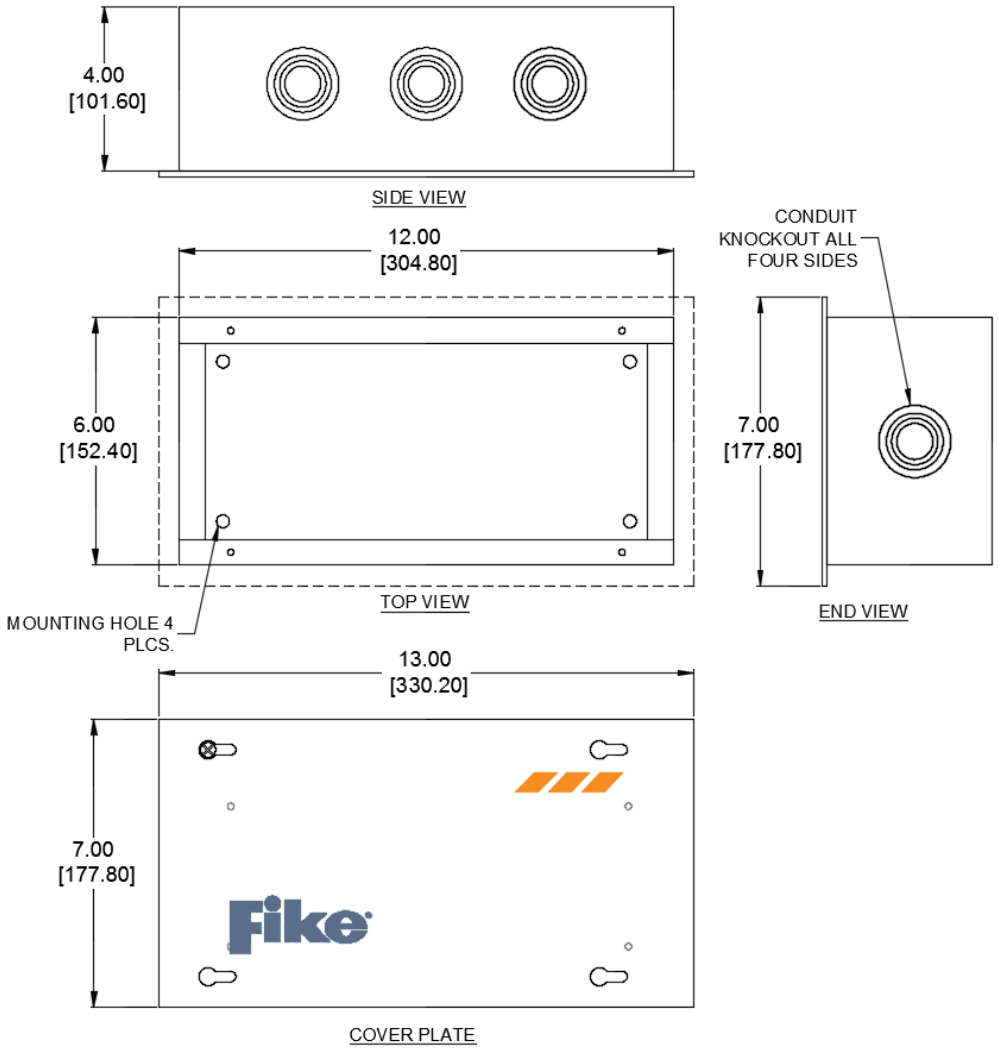


**Figure 2 – PC Link HLI Enclosure**

## 2.4. Electrical Specifications

The Fike PC Link HLI provides two terminal blocks that allow connection of 24VDC power and VESDAnet wiring. An RJ11 jack is provided to allow connection of the interconnection cable between the HLI and the host control panel (Figure 3).

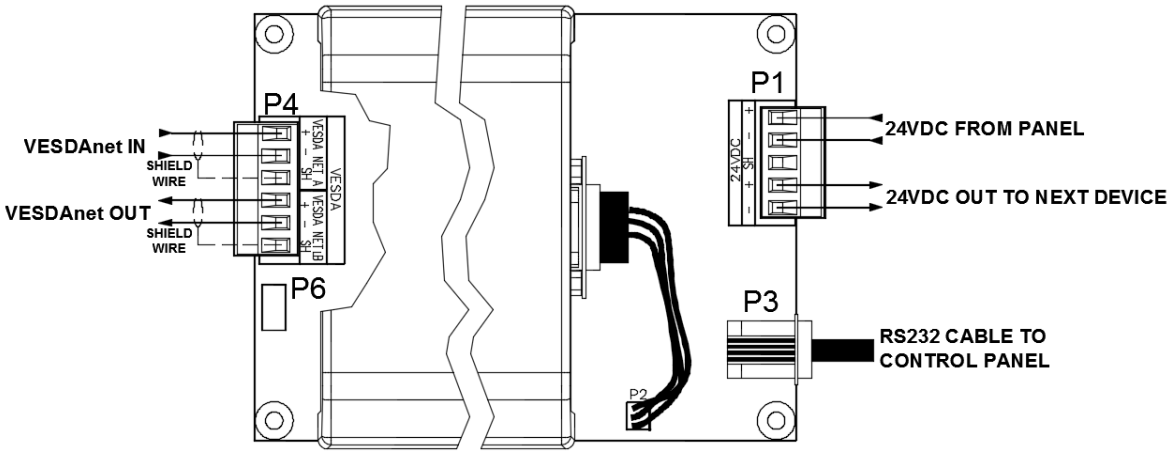


**Figure 3 – PC Link Modbus HLI Wiring Diagram**

| TERMINAL | DESCRIPTION | SPECIFICATION DETAILS |
|---|---|---|
| **P1 – 24VDC**<br>+<br>-<br>SH<br>+<br>- | 24VDC power Input/Output<br>Power-limited and supervised | ▪ 101 mA @ 18-30 VDC (standby and alarm)<br>▪ Power for the VESDA High Level Interface must come from the power supply on Fike Control Panel or a ground fault could result.<br>▪ Wiring 16AWG minimum, THHN<br>▪ Terminal block accepts 12 AWG–16 AWG<br>▪ 20 ft. (6.1 m) maximum cable length between Fike control panel and HLI located in same room. Cable must be in conduit or equivalently protected against mechanical injury |
| **P3**<br>**Panel Connection** | RS232 communication to single HLI<br>Non-power-limited and supervised | ▪ 20 ft. (6.1 m) maximum cable length between Fike control panel and HLI located in same room. Cable must be in conduit or equivalently protected against mechanical injury<br>▪ Fike supplied serial communication cable (P/N 02-15802), 20 ft. (6.1 m) in length |
| **P4 - VESDA**<br>A+<br>A-<br>SH<br>B+<br>B-<br>SH | VESDAnet connection Incoming/Outgoing<br>RS485 non-power-limited and supervised | ▪ Class A VESDAnet pathway only<br>▪ Shielded twisted pair cable (Belden 9841 wiring or equivalent), 100Ω maximum impedance<br>▪ 4000 ft. (1219 m) maximum between two VESDAnet devices<br>▪ Maximum 100 VESDA detectors |
| **P6** | HLI ground fault isolation jumper | Remove jumper if ground fault supervision from a VESDA power supply causes the host control panel to report a ground fault. |

# 3. INSTALLATION

The Fike PC Link HLI should not be installed until after all construction clean-up has been completed in order to avoid any potential damage to the electronics due to dust and debris. Before installing the HLI assembly into the enclosure, thoroughly clean the enclosure to remove any dirt, dust and debris.

## 3.1. Mounting

The mounting location for the Fike PC Link HLI is very important. It must be located in the same room and within 20 feet (6 m) of the host control panel. The following guidelines shall be considered when selecting the mounting location for the HLI:

1. Locate the enclosure in an area that is readily accessible with sufficient room to allow easy installation and maintenance.
2. The room shall be capable of maintaining a nominal temperature of 32° - 120°F (0° - 49°C) with a relative humidity less than 93%.
3. Additional items to consider when selecting the mounting location shall include: vibration, dust, moisture, electromagnetic interference, and radio frequency interference.

All of the items listed above could adversely affect the successful operation and useful life of the HLI electronic components and should be avoided if possible.

## 3.2. Enclosure Installation

The Fike PC Link HLI enclosure is equipped with four mounting holes in the back box that allows surface mounting of the box to the wall surface (Figure 4). The mounting holes are spaced at 10 inch (25.4 cm) horizontal centers and 4 inch (10 cm) vertical centers.

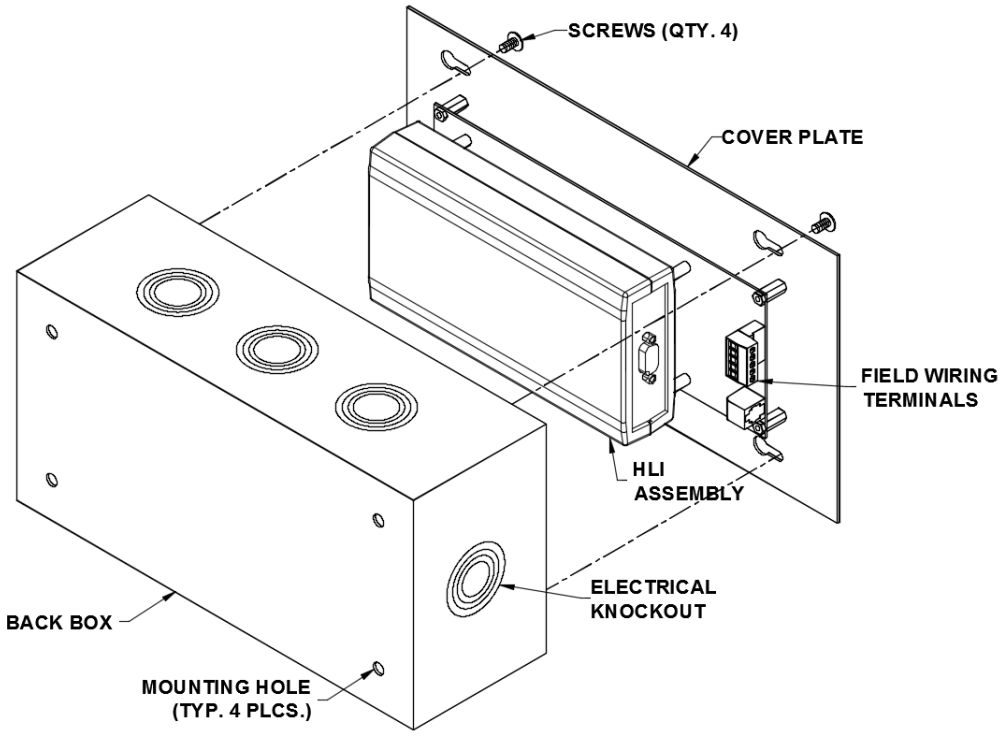


**Figure 4 – PC Link Modbus HLI Enclosure Installation**

## 3.3. HLI Connection to Control Panel

The Fike PC Link HLI connects to the Cheetah Xi and CyberCat control panels via an RS232 cable connection. The HLI must be located a maximum of 20 feet (6.1 m) from the control panel in the same room. HLI must be powered from the host control panel's 24VDC continuous auxiliary output. Figures 5 and 6 show how to connect the HLI to each control panel.

**NOTE:** The RS232 serial communication cable (P/N 02-15802) is polarity sensitive. One end of the cable is labeled HLI and must be attached to the P3 connector on the HLI carrier board for proper operation.

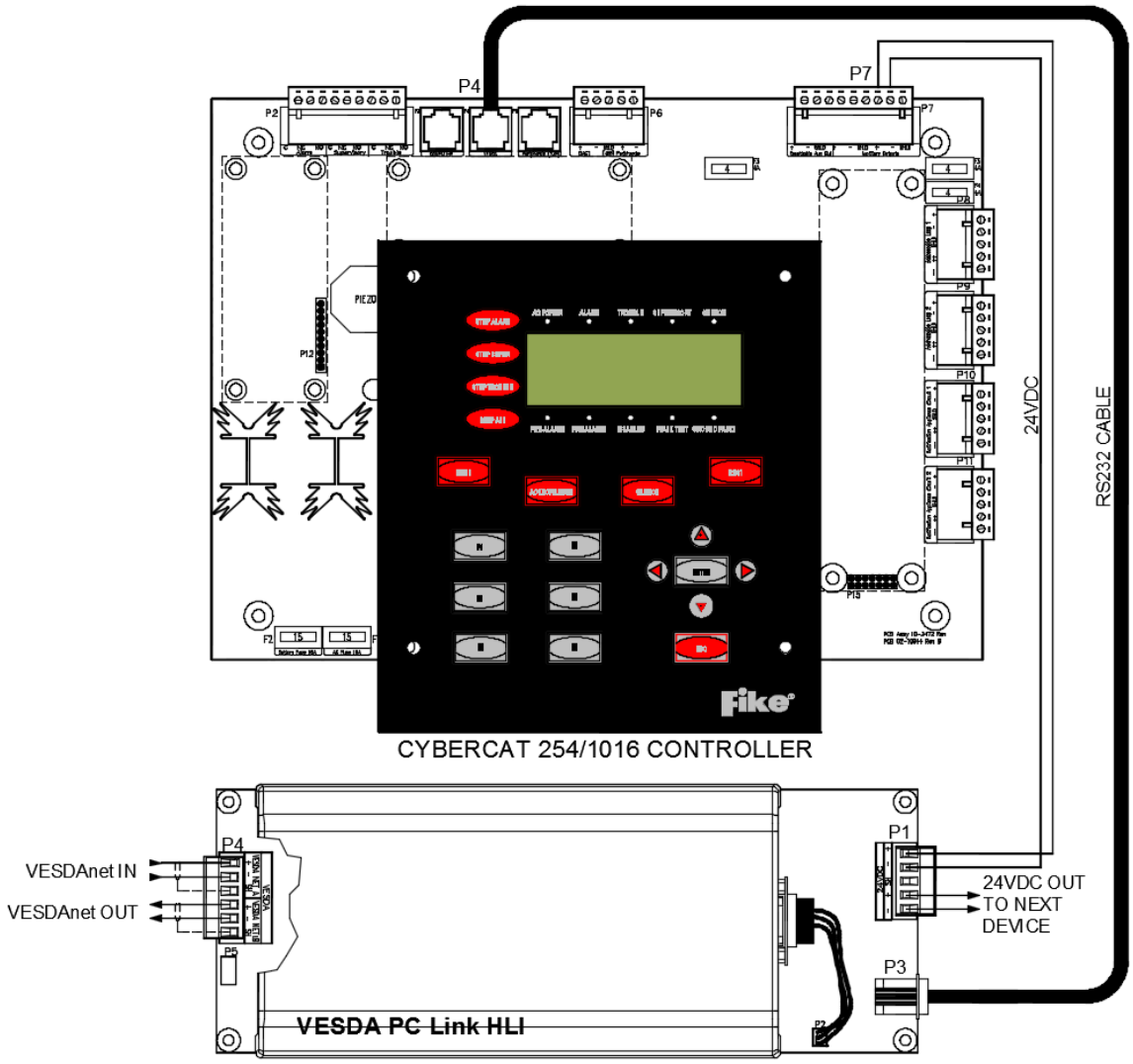


**Figure 5 – Cheetah Xi and CyberCat HLI Wiring Diagram**

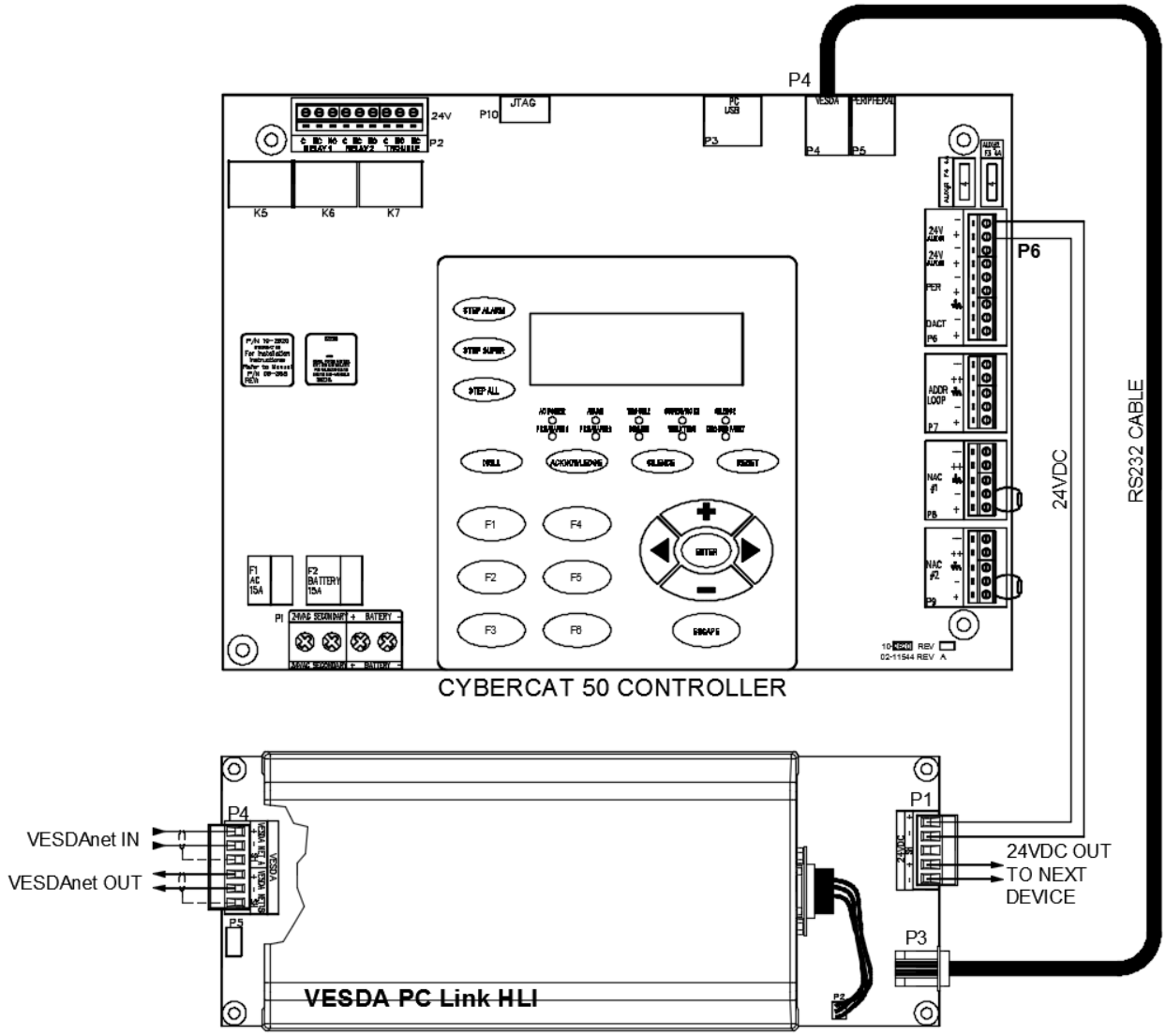


**Figure 6 – Cheetah Xi 50 and CyberCat 50 HLI Wiring Diagram**

## 3.4. VESDAnet

The Fike PC Link HLI can be connected at any point on the VESDAnet network within 4000 ft. (1219 m) of the VESDA devices it is wired to (Figure 7).

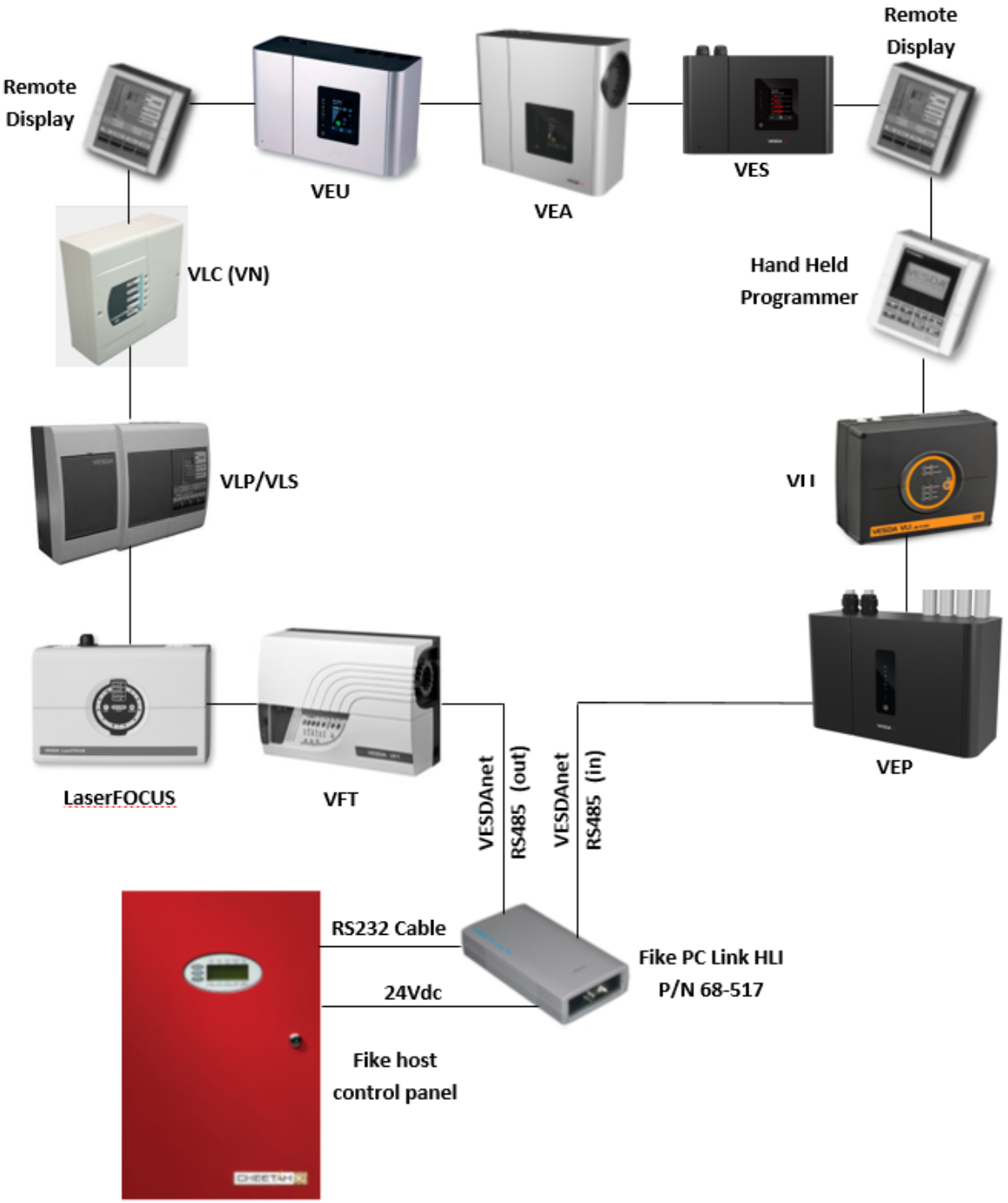


**Figure 7 – VESDAnet Example**

## 3.4.1. VESDAnet Wiring

The VESDAnet is wired using a shielded RS485 (Belden 9841) twisted pair connected to the termination card in each VESDA device. The termination card has two VESDAnet terminals (Channel “A” and “B”). One channel is used as an input channel and the other as an output channel. The polarity of the data wires must be maintained throughout the network, always connect network A+ to B+, A- to B-. Data communication between the devices on the VESDAnet is bidirectional.

The VESDAnet must be wired as a “Closed” loop where every device is connected to more than one device (Figure 8).

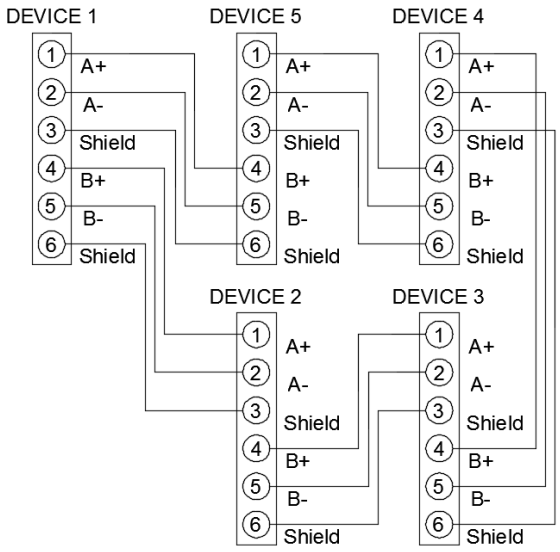


**Figure 8 – VESDAnet “Closed” Loop**

**NOTE:** VESDAnet shield wire must be landed at each VESDAnet device for proper control panel supervision to occur.

## 3.4.2. VESDA Power

Detection of a ground fault on the VESDAnet and subsequent transmission of the event to the Cheetah Xi and CyberCat panels via the HLI interface can be inhibited by the method that is used to supply 24 VDC power to the VESDA detectors. If 24 VDC power to the VESDA detectors is supplied by the Cheetah Xi or CyberCat panel, proper ground fault monitoring will occur without any changes required. However, If 24 VDC power to the VESDA detectors is supplied from a separate (standalone) power supply, the power supply must meet one of the following installation requirements for proper ground fault detection to occur:

1. The power supply itself must be capable of performing its own ground fault detection and must provide a ground fault relay that can be monitored by the Cheetah Xi or CyberCat panel for ground fault with a monitor module. If power supply ground fault detection causes the host panel to report a ground fault, remove jumper P6 from the HLI to disconnect earth ground fault reference from the HLI.
2. If the power supply used to power the VESDA detector(s) does NOT have ground fault detection capabilities, it must be installed in the same room within 20 ft. (6.1 m) of the VESDA detector it powers. Power cable between the power supply and the VESDA detector must be in installed in conduit or equivalently protected against mechanical injury.

**NOTE:** For E-Series VESDA detectors (VEU, VEP, VES) equipped with a Reference Terminal Jumper, remove the jumper when they share a VESDAnet with an HLI.

# 4. CONFIGURATION

This section outlines the process used to configure the VESDA detectors into the system using the host control panel's configuration menus. For a detailed description of the Fike Control Panels, refer to Section 1.2 for a listing of related documentation.

## 4.1. VESDA Detector Configuration

Each VESDA detector must be programmed with a VESDA programmer or by using the VESDA VSC configuration software. Refer to the VESDA System Design Manual for details on how to set up the VESDA detectors.

## 4.2. Control Panel Configuration

The Cheetah Xi and CyberCat configuration menus are password protected to prevent unauthorized access. To gain access to the panels configuration menus, you must enter a valid Level 3 password. Entering a Level 2 password gives you the ability to view all of the panel's current configuration settings, but restricts the settings that you are able to change. Refer to the associated panels Programming manual for instructions on how to log onto the system.

### 4.2.1. Configuration Menu 4

After you have successfully logged onto the system, use the display function keys to navigate to CONFIGURATION MENU 4.

| | 1 | 2 | 3 | 4 | 5 | 6 | 7 | 8 | 9 | 0 | 1 | 2 | 3 | 4 | 5 | 6 | 7 | 8 | 9 | 0 |
|---|---|---|---|---|---|---|---|---|---|---|---|---|---|---|---|---|---|---|---|---|
| A | C | O | N | F | I | G | U | R | A | T | I | O | N | | M | E | N | U | | 4 |
| B | F | 1 | - | A | C | | D | E | L | | F | 4 | - | P | W | R | | C | U | T |
| C | F | 2 | - | V | E | S | D | A | | | F | 5 | - | R | E | L | A | Y | S | |
| D | F | 3 | - | | | | | | | | F | 6 | - | M | E | N | U | | 5 | |

**Figure 9 - Configuration Menu 4**

### 4.2.2. F2 - VESDA

From "CONFIGURATION MENU 4", press the F2 key to select the HLI type that is connected to the control panel. This selection must be set to "MODBUS" for proper communication to occur between the control panel and the VESDAnet, when using the PC Link Modbus HLI.

| | 1 | 2 | 3 | 4 | 5 | 6 | 7 | 8 | 9 | 0 | 1 | 2 | 3 | 4 | 5 | 6 | 7 | 8 | 9 | 0 |
|---|---|---|---|---|---|---|---|---|---|---|---|---|---|---|---|---|---|---|---|---|
| A | | | S | E | L | E | C | T | | H | L | I | | T | Y | P | E | : | | |
| B | | | | | | | | M | O | D | B | U | S | | | | | | | |
| C | | | | | | | | | | | | | | | | | | | | |
| D | | | E | N | T | E | R | | T | O | | S | E | L | E | C | T | | | |

**Figure 9 - VESDA HLI Protocol Screen**

- Row B - This field is used to select the protocol of the HLI that is connected to the control panel. Use the +/- keys to toggle the selection between "OPEN PROTOCOL" or "MODBUS".

  OPEN PROTOCOL – This setting must be used when the older open protocol HLI (P/N 68-023) is used.

  MODBUS – This setting must be used when the new Modbus HLI (P/N 68-517) is used. Refer to Section 4.2.3 for configuration options.

Press the ENTER key to accept the change. The Modbus HLI configuration menu will be displayed.

## 4.2.3. PC Link Modbus HLI Configuration

The options in “MODBUS HLI MENU” are used to change the operating parameters for the VESDA detectors connected to the Cheetah Xi or CyberCat panel via a PC Link Modbus protocol HLI (P/N 68-517).

| | 1 | 2 | 3 | 4 | 5 | 6 | 7 | 8 | 9 | 0 | 1 | 2 | 3 | 4 | 5 | 6 | 7 | 8 | 9 | 0 |
|---|---|---|---|---|---|---|---|---|---|---|---|---|---|---|---|---|---|---|---|---|
| A | **F** | **1** | **-** | **D** | **E** | **T** | **E** | **C** | **T** | **O** | **R** | **S** | | | | | | | | |
| B | **F** | **2** | **-** | **S** | **E** | **C** | **T** | **O** | **R** | **S** | | **A** | **N** | **D** | | **P** | **I** | **P** | **E** | **S** |
| C | **F** | **3** | **-** | **T** | **E** | **M** | **P** | **L** | **A** | **T** | **E** | **S** | | | **F** | **5** | **-** | **H** | **L** | **I** |
| D | **F** | **4** | **-** | **A** | **N** | **N** | **U** | **N** | | | **F** | **6** | **-** | **R** | **E** | **L** | **E** | **A** | **S** | **E** |

**Figure 10 – Modbus HLI Configuration Menu**

Press the corresponding function key to display the selected operating parameters screen:

**F1** = VESDA Detector Alarm Features

**F2** = VESDA Sectors and Pipes

**F3** = VESDA VEA Templates

**F4** = VESDA Annunciation

**F5** = HLI Features

**F6** = VESDA Release Features (Cheetah Xi only)

### 4.2.3.1. F1 - Detector Configuration

From the “MODBUS HLI MENU”, press F1 to access the “CONFIGURATION” screen. This screen is used to configure the control panel to recognize a VESDA detector via the “MODBUS” protocol HLI connection.

| | 1 | 2 | 3 | 4 | 5 | 6 | 7 | 8 | 9 | 0 | 1 | 2 | 3 | 4 | 5 | 6 | 7 | 8 | 9 | 0 |
|---|---|---|---|---|---|---|---|---|---|---|---|---|---|---|---|---|---|---|---|---|
| A | V | E | S | D | A | | Z | O | N | E | | N | U | M | : | | 0 | 0 | 1 | |
| B | T | Y | P | E | : | V | E | A | - | 1 | 2 | 0 | | A | L | M | | E | N | A |
| C | C | U | S | T | O | M | | M | E | S | S | A | G | E | | V | Z | 0 | 0 | 1 |
| D | Z | O | N | E | : | 0 | 0 | 0 | | 0 | 0 | 0 | | 0 | 0 | 0 | | 0 | 0 | 0 |

**Figure 11 - Detector Configuration Screen**

- Row A (ZONE) - This field is used to select the VESDA detector (zone) to be configured. Use the +/- keys to change to a different detector (zone) number.

  The zone number selected here corresponds to zone number assigned to the VESDA detector during programming. Each detector on the VESDAnet must be assigned a unique zone number (1–246). This identifier is typically different than the zone that it is programmed to participate in the panel (Row D).

- Row B (TYPE) - This field is used to select the VESDA detector type associated with the selected detector (zone) number from Row A. Use the ◄► arrow keys to position the cursor under the field; then use the +/- keys to select the desired detector type: VLC, VLP, VLS, VLF, VLI, VFT-15, VEP, VEP-1, VEP-2, VEU, VEA-40, VEA-60, VEA-80, VEA-100, VEA-120.

  **NOTE:** If using a VES detector, the device must be first configured via the Xtralis VSC software to mimic a VLS device. Once that is done, set the device up as a VLS device on the panel.

  **NOTE:** If the detector type is set to VFT-15, the next 15 consecutive VESDA zone numbers directly after the zone number selected in Row A will automatically be assigned to the VFT detectors sampling tubes (sectors). No other VESDA detector can occupy these zones.

- Row B (ALM) - This field is used to select the state the panel will enter when the VESDA reaches the FIRE-1 level. Use the ◄► arrow keys to position the cursor under the “ALM” field; then use +/- keys to select the state of operation for the detector; “ALM” (Alarm-default) or “SUP” (Supervisory). Refer to Sections 5.1 and 5.2 for description of panel operation for each state.

  **NOTE:** If the panel is configured for Alarm operation at VESDA Fire-1 level, the VESDA detector must be programmed to latch the event at the Fire-1 and Fire-2 levels.

- Row B (ENA) - This field is used to select the Enable/Disable state of the detector. Disabling will stop the panel’s supervision of the detector. Use the ◄►arrow keys to position the cursor under the “ENA” field; then use the +/- keys to enable or disable the detector. If the VESDA is disabled and still attached to P4, the panel will treat this condition as an un-configured VESDA and will display a “VESDA CFG ERR” for this condition.

- Row C - This range of fields is used to assign a Custom Message for detector that will be displayed on the Fike control panel. Use the ◄► arrow keys to position the cursor under the field; then use the +/- keys to cycle through all ASCII characters and display the desired character. Repeat for each field until custom message is completed.

- Row D - These fields are used to select up to four Cheetah Xi or CyberCat panel zones that this detector will participate in. These zone assignments are used to activate alarm notification appliances and other control functions associated with the Cheetah Xi and CyberCat panels. Use the ◄► arrow keys to position the cursor under each field; then use the +/- keys to change zones to that desired (1–253). Repeat for each of four zones required.

Press the ESCAPE key to return to the Modbus HLI configuration menu.

### 4.2.3.2. F2 - Sectors and Pipes

VESDA VLS, VFT-15 and VEA detectors are designed to sample air from different sectors (pipes) and to identify through a scanning process the sector reporting the presence of smoke. When connected to the Cheetah Xi or CyberCat control panels via the PC Link Modus HLI, each pipe (sector) can be assigned to a separate panel zone number and state ("Alarm" or "Supervisory").

When configuring a VESDA VFT or VEA detector, the zone and state assignment for each pipe (sector) is used for point annunciation purposes only and should "NOT" be used to activate alarm notification appliances and other control functions associated with within the Cheetah Xi and CyberCat panels. This is due to the fact that the detector's scan function that is used to identify the sampling pipes where the fire alarm event is initiated after the detector reaches a Fire 1 alarm level will delay the Cheetah Xi and CyberCat panel's response time for processing and activation of signals. This could exceed the maximum ten second response time required by NFPA 72 for processing of Alarm events.

From the "MODBUS HLI MENU", press F2 to access the "SECTORS AND PIPES" screen. This screen is used to assign each VESDA pipe (sector) to a panel operational state and zone.

| | 1 | 2 | 3 | 4 | 5 | 6 | 7 | 8 | 9 | 0 | 1 | 2 | 3 | 4 | 5 | 6 | 7 | 8 | 9 | 0 |
|---|---|---|---|---|---|---|---|---|---|---|---|---|---|---|---|---|---|---|---|---|
| A | V | E | S | D | A | | Z | O | N | E | | N | U | M | : | | 0 | 0 | 1 | |
| B | T | Y | P | E | : | V | E | A | - | 1 | 2 | 0 | | | | | | | | |
| C | P | I | P | E | : | 0 | 0 | 1 | | A | L | A | R | M | | | | | | |
| D | Z | O | N | E | : | 0 | 0 | 1 | | | | | | | | | | | | |

**Figure 12 – Sectors and Pipes Screen**

- Row A - This field is used to select the VESDA detector (zone) to be configured (1-246). Use the +/- keys to change to a different detector (zone) number.

  The zone number selected here corresponds to zone number assigned to the VESDA detector during programming. Each detector on the VESDAnet must have a unique zone number. This identifier is different than the zone that it is programmed to participate in the panel (Row D).

- Row A (VZ) - This field displays the control panel zone number that has been assigned to the VESDA detector.

- Row B (Type) - This field displays the type of VESDA associated with the detector (zone) number selected in Row A: VLC, VLP, VLS, VLF, VLI, VFT-15, VEP, VEP-1, VEP-2, VEU, VEA-40, VEA-60, VEA-80, VEA-100, VEA-120.

  **NOTE:** VES detectors will display as a VLS device on the panel.

- Row C (Pipe) – These fields are used to assign a panel operational state "Alarm" or "Supervisory" to the selected VESDA pipe number. Use the ◄► arrow keys to position the cursor under the pipe field (000); then use the +/- keys to select the desired pipe. Use the ◄► arrow keys to position the cursor under the state field; then use the +/- keys to toggle between the available states "ALARM" and "SUPERVISORY". Repeat for each pipe (sector).

  **NOTE:** If the main detector configuration is set for "SUPERVISORY", pipes can only be assigned to the "SUPERVISORY" state. If the main detector configuration is set for "ALARM", pipes can be assigned to either the "SUPERVISORY" or "ALARM" state.

- Row D (Zone) – This field is used to assign a Cheetah Xi or CyberCat zone that the VESDA pipe (sector) selected in Row C will participate in. Use the ◄► arrow keys to position the cursor under the field; then use the +/- keys to assign the pipe to the zone for annunciation purposes (1-253). Repeat for each pipe (sector).

- Row D (Templates) - If the VESDA type indicated in Row B is a VEA detector, Row D will change from “Zone” to “Templates”. The three template fields are used to assign the VEA detectors multiple sampling pipes to individual zone templates for annunciation purposes (Refer to Section 4.2.3.3). Use the ◄► arrow keys to position the cursor under each field; then use the +/- keys to assign the zone templates. Repeat for each template field.

| | 1 | 2 | 3 | 4 | 5 | 6 | 7 | 8 | 9 | 0 | 1 | 2 | 3 | 4 | 5 | 6 | 7 | 8 | 9 | 0 |
|---|---|---|---|---|---|---|---|---|---|---|---|---|---|---|---|---|---|---|---|---|
| A | D | E | T | E | C | T | O | R | : | 0 | 0 | 1 | | V | Z | : | 0 | 0 | 1 | |
| B | T | Y | P | E | : | V | E | A | - | 4 | 0 | | | | | | | | | |
| C | P | I | P | E | : | 0 | 0 | 1 | | A | L | A | R | M | | | | | | |
| D | T | E | M | P | L | A | T | E | S | : | | 0 | 0 | | 0 | 0 | | 0 | 0 | |

**Figure 13 – Sectors and Pipes Screen**

Press the ESCAPE key to return to the Modbus HLI configuration menu.

### 4.2.3.3. F3 – Templates (Applicable to VEA detectors only)

VESDA VEA detectors can have multiple sampling points ranging from 1 - 120 and each pipe (sector) can be assigned to a different panel zone number for annunciation purposes. In order to simplify the zone assignment process for the pipes, the Cheetah Xi and CyberCat panels utilize zone templates, each of which can be assigned to one or more VEA detectors in the VESDA “SECTORS AND PIPES” screen (Refer to Section 4.2.3.2).

From the “MODBUS HLI MENU”, press F3 to access the “TEMPLATES” screen. This screen is used to create zone templates for each forty pipe section of a VESDA VEA detector, with each pipe (sector) assigned to a separate control panel zone. Up to twenty zone templates can be created.

| | 1 | 2 | 3 | 4 | 5 | 6 | 7 | 8 | 9 | 0 | 1 | 2 | 3 | 4 | 5 | 6 | 7 | 8 | 9 | 0 |
|---|---|---|---|---|---|---|---|---|---|---|---|---|---|---|---|---|---|---|---|---|
| A | T | E | M | P | 0 | 0 | | P | 0 | 1 | - | 1 | 0 | | 0 | 1 | : | 0 | 0 | 0 |
| B | 0 | 2 | : | 0 | 0 | 0 | | 0 | 3 | : | 0 | 0 | 0 | | 0 | 4 | : | 0 | 0 | 0 |
| C | 0 | 5 | : | 0 | 0 | 0 | | 0 | 6 | : | 0 | 0 | 0 | | 0 | 7 | : | 0 | 0 | 0 |
| D | 0 | 8 | : | 0 | 0 | 0 | | 0 | 9 | : | 0 | 0 | 0 | | 1 | 0 | : | 0 | 0 | 0 |

**Figure 14 – Templates Screen**

- Row A (TEMP) – This field is used to select the zone template to be configured. Use the +/- keys to change to a different template number (00 – 19).
- Row A (P01-10) – This field is used to select the group of pipes to be configured for the selected template in Row A.
- Rows A–D (Zone fields) – These fields are used to assign a Cheetah Xi or CyberCat zone that the VESDA pipe (sector) will participate in. Use the ◄► arrow keys to position the cursor under the field; then use the +/- keys to assign the pipe to the zone for annunciation purposes (1-253). Repeat for each pipe (sector).

### 4.2.3.4. F4 - Annunciation

From the "VESDA CONFIGURATION MENU", press the F4 key to access the "ANNUNCIATION" screen. This screen is used to configure a VESDA detector to report as a "virtual" address on the Cheetah Xi or CyberCat panel peripheral buss. It is used only if the VESDA needs to be monitored by a point ID system (i.e., DACT, LED Graphic, Computer Graphic, etc.). Pressing the F1 key from this screen will allow you to edit the 400 available custom messages that can be assigned to VESDA sectors (pipes).

| | 1 | 2 | 3 | 4 | 5 | 6 | 7 | 8 | 9 | 0 | 1 | 2 | 3 | 4 | 5 | 6 | 7 | 8 | 9 | 0 |
|---|---|---|---|---|---|---|---|---|---|---|---|---|---|---|---|---|---|---|---|---|
| A | **V** | **E** | **S** | **D** | **A** | | **Z** | **O** | **N** | **E** | | **N** | **U** | **M** | **:** | | **0** | **0** | **1** | |
| B | | | | | | **L** | **O** | **O** | **P** | **:** | | **0** | | | | | | | | |
| C | | | | | | **A** | **D** | **D** | **R** | **:** | | **0** | **0** | **0** | | | | | | |
| D | | **F** | **1** | **-** | **S** | **E** | **C** | **T** | **O** | **R** | | **M** | **E** | **S** | **S** | **A** | **G** | **E** | **S** | |

**Figure 15 - VESDA Annunciation Screen**

- Row A - This field is used to select the VESDA detector (zone) number to be configured. Use the ◄► arrow keys to position the cursor under the field; then use the +/- keys to change to VESDA detector zone number (1 – 246).

> **NOTE:** The zone number set here corresponds to zone number assigned to the VESDA detector during programming. Each detector on the VESDAnet must have a unique zone number.

- Row B - This field is used to select a control panel virtual loop number that the VESDA detector activation will correspond with. Use the ◄► arrow keys to position the cursor under the field; then use the +/- keys to change the loop number.
- Row C - This field is used to select a control panel virtual address number that the VESDA detector activation will correspond with. Use the ◄► arrow keys to position the cursor under the field; then use the +/- keys to change the address number (1-254).

> **NOTE:** Refer to Section 5.5 for further description of the virtual address functionality.

- Row D – Press the F1 key to access the VESDA sectors custom message configuration screen. Refer to Section 4.2.3.4.1.

Press the ESCAPE key to return to the Modbus HLI configuration menu.

### 4.2.3.4.1. F1 – Sector Messages

From the "VESDA ANNUNCIATION" screen, press the F1 key to access the "SECTOR MESSAGES" screen. This screen is used to create and assign up to 400 custom messages, 20 characters each that can be assigned to a single VESDA sector. These sector event messages will be transmitted onto the panel's peripheral and panel network busses for annunciation purposes.

| | 1 | 2 | 3 | 4 | 5 | 6 | 7 | 8 | 9 | 0 | 1 | 2 | 3 | 4 | 5 | 6 | 7 | 8 | 9 | 0 |
|---|---|---|---|---|---|---|---|---|---|---|---|---|---|---|---|---|---|---|---|---|
| A | M | E | S | S | A | G | E | | N | U | M | B | E | R | : | 0 | 0 | 1 | | |
| B | V | E | S | D | A | : | 0 | 0 | 1 | | S | E | C | T | O | R | : | 0 | 0 | 1 |
| C | C | U | S | T | O | M | | M | E | S | S | A | G | E | | V | Z | 0 | 0 | 1 |
| D | T | Y | P | E | : | - | - | - | - | - | - | - | | | | | | | | |

**Figure 16 – Sector Messages Screen**

- Row A - This field is used to select the VESDA sector message number to be configured. Use the ◄► arrow keys to position the cursor under the fields; then use the +/- keys to change to VESDA sector message number (1 – 400).
- Row B – These fields are used to select the VESDA zone (1 - 246) and sector number (1 - 120) that will be assigned to the message number selected in Row A. Use the ◄► arrow keys to position the cursor under the fields; then use the +/- keys to change to VESDA zone and sector number.
- Row C – These fields are used to define the 20 character custom message that will be assigned to the message number selected in Row A. Use the ◄► arrow keys to position the cursor under the fields; then use the +/- keys to change the field value.
- Row D – Displays the detector type for the VESDA zone selected in Row B. Informational purposes only.

### 4.2.3.4.2. F2 – DACT Supervisory Annunciation

From the "VESDA Annunciation" screen, press the F2 key to access the "VESDA-DACT ANNUNCIATION" screen. This screen is used to configure the Cheetah Xi or CyberCat panel to send a supervisory DACT code upon the VESDA detector reaching either the Alert or Action level. It is used only if a distinct activation signal for VESDA Alert or Action is required to be sent to a remote monitoring station. Enabling this feature will also cause a supervisory signal to be initiated in the zones assigned to the VESDA detector upon it reaching the Alert or Action level.

| | 1 | 2 | 3 | 4 | 5 | 6 | 7 | 8 | 9 | 0 | 1 | 2 | 3 | 4 | 5 | 6 | 7 | 8 | 9 | 0 |
|---|---|---|---|---|---|---|---|---|---|---|---|---|---|---|---|---|---|---|---|---|
| A | V | E | S | D | A | - | D | A | C | T | | O | P | E | R | A | T | I | O | N |
| B | | | | | | S | U | P | E | R | V | I | S | O | R | Y | | | | |
| C | | | | | | | | | O | F | F | | | | | | | | | |
| D | | | | | | | | | | | | | | | | | | | | |

**Figure 17 – VESDA-DACT Annunciation Screen**

- Row C - This field is used to select the detection level (Alert, Action or Off) that will initiate the supervisory event for DACT transmission. Use the +/- keys to change to setting.

**NOTE:** A factory level password must be entered in order to enable this panel feature. Refer to Section 5.1.1 for further description of the VESDA-DACT annunciation functionality.

### 4.2.3.5. F5 - HLI

From the “MODBUS HLI MENU”, press F5 to access the “HLI” type screen. This screen lets you verify the protocol and software version of the connected Modbus HLI (P/N 68-517).

| | 1 | 2 | 3 | 4 | 5 | 6 | 7 | 8 | 9 | 0 | 1 | 2 | 3 | 4 | 5 | 6 | 7 | 8 | 9 | 0 |
|---|---|---|---|---|---|---|---|---|---|---|---|---|---|---|---|---|---|---|---|---|
| A | | | | | | H | L | I | | T | Y | P | E | : | | | | | | |
| B | | | | | | | | M | O | D | B | U | S | | | | | | | |
| C | P | R | O | T | O | C | O | L | : | 0 | 0 | 0 | . | 0 | 2 | 2 | . | 0 | 2 | 0 |
| D | S | O | F | T | W | A | R | E | : | 0 | 0 | 0 | . | 0 | 0 | 0 | | | | |

**Figure 18 – HLI Type Screen**

- Row B (TYPE) – Displays the HLI type (Open Protocol / Modbus) the panel is configured to communicate with.
- Row C (PROTOCOL) – Displays the protocol version used by the connected HLI.
- Row D (SOFTWARE) – Displays the software version used by the connected HLI.

  Press the ENTER key will cause the panel to query the connected HLI to determine its protocol and software version. The protocol and software version numbers will briefly show all ‘0’s after ENTER is pressed until the HLI returns these values and they are displayed on rows C and D.

### 4.2.3.6. F6 - Release Features (Not available in CyberCat)

From the "VESDA CONFIGURATION MENU", press the F6 key to access the "RELEASE FEATURES" screen. VESDA detectors can be configured to participate in suppression system release, just like a standard smoke detector connected to the eclipse loop. In order to participate, each VESDA detector must be assigned a Predischarge type, Predischarge level, and countdown type. Each of these variables affects how the Cheetah Xi system will respond when the VESDA detector activates. All three variables are stored in panel memory.

| | 1 | 2 | 3 | 4 | 5 | 6 | 7 | 8 | 9 | 0 | 1 | 2 | 3 | 4 | 5 | 6 | 7 | 8 | 9 | 0 |
|---|---|---|---|---|---|---|---|---|---|---|---|---|---|---|---|---|---|---|---|---|
| A | V | E | S | D | A | | Z | O | N | E | | N | U | M | : | | 0 | 0 | 1 | |
| B | P | R | E | - | D | I | S | C | H | | T | Y | P | E | : | | A | - | A | L |
| C | P | R | E | - | D | I | S | C | H | | L | E | V | : | | F | I | R | E | 1 |
| D | C | O | U | N | T | D | O | W | N | : | | A | U | T | O | M | A | T | I | C |

**Figure 19 - Release Features Screen**

- Row A - This field is used to select the VESDA detector (zone) number to be configured. Use the ◄► arrow keys to position the cursor under the field; then use the +/- key to change to VESDA detector zone number.

  The zone number set here corresponds to zone number assigned to the VESDA detector during programming. Each detector on the VESDAnet must be assigned a unique zone number (1 – 254).

- Row B – This field is used to assign a Predischarge type (A – E) for the selected VESDA zone number(s) as assigned in the VESDA Alarm Features screen (Refer to 4.1.3) and not the sector zones. The Predischarge type only applies when the VESDA detector reaches the FIRE-1 or FIRE-2 level. Use the ◄► arrow keys to position the cursor under the field; then use the +/- keys to change the field value.
  - **A (Alarm Only)** - Predischarge will NOT occur in the zones assigned to this device from the alarm of this device.
  - **B (1st Cross Zone) -** Predischarge will occur in the zones assigned to this device when a corresponding "C" type is alarmed.
  - **C (2nd Cross Zone) -** Predischarge will occur in the zones assigned to this device when a corresponding "B" type is alarmed.
  - **D (Counting Zone)** - Predischarge will occur when two or more "D" types are alarmed in the assigned zones.
  - **E (Single Detector Predischarge)** - Only one alarmed "E" type will cause Predischarge in the assigned zones.

  To the right of the Predischarge type field is a two-letter designator that indicates the operation state assigned to the VESDA detector in the Detector Configuration screen (Refer to 4.2.3.1). The VESDA release features only work when the operational state is set to Alarm (ALM).

  **NOTE:** The zones involved in suppression are the four zone numbers selected in the VESDA "CONFIGURATION" screen (Refer to Section 4.2.3.1). Sector zones are NOT involved in suppression.

- Row C – This field is used to select whether the selected VESDA detector will initiate the Predischarge state upon the VESDA detector reaching Fire-1 or Fire-2 alarm level. Use the ◄► arrow keys to position the cursor under the field; then use the +/- keys to change the field value.

- Row D – This field is used to select whether the selected VESDA detector will utilize the Automatic or Manual countdown timer set for the zone should it cause a Predischarge in any of its assigned zones (Refer to 4.2.3.1). Use the ◄► arrow keys to position the cursor under the fields; then use the +/- keys to change the field value.

**NOTE:** The VESDA Compact detector can participate in Predischarge on the Cheetah Xi panel, since FIRE-1 level may be selected to participate in Predischarge operation.

Press the ESCAPE key to return to the Modbus HLI configuration menu.

# 5. OPERATION

The Cheetah Xi and CyberCat control panels can be configured to initiate either and Alarm or Supervisory state in the four zones assigned to the VESDA detector when Fire-1 level is reached. Panel operation for each panel and state varies as described in this section.

**NOTE:** Latching events require the panel to be reset to clear the condition. Non latching events will self-restore the panel to normal.

## 5.1. Alarm on VESDA Fire-1

If the Cheetah Xi or CyberCat control panel is configured to initiate an **Alarm** state when the VESDA detector reaches the Fire-1 level, the following levels and states will be seen and activated on the panel:

| | Cheetah Xi | CyberCat |
|---|---|---|
| **Alert Level** | Panel Trouble LED illuminates | Panel Pre-Alarm LED illuminates |
| | Panel piezo (sounder) on steady | |
| | Trouble state initiated for zone (non-latching)[1,7] | Pre-Alarm-1 state initiated for zone (non-latching)[1,7] |
| | Panel (P2) onboard relays inactive | |
| **Action Level** | Panel Trouble LED illumines | Panel Pre-Alarm LED illuminates |
| | Panel piezo (sounder) on steady[2] | |
| | Trouble state initiated for zone (non-latching)[1,7] | Pre-Alarm-2 state initiated for zone (non-latching)[1,7] |
| | Panel (P2) onboard relays inactive | |
| **Fire-1 Level** | Panel Alarm LED illuminates | |
| | Panel piezo (sounder) on steady | |
| | Alarm state entered for zone (latching)[3,6] | |
| | Pre-discharge state entered for zone (optional)[4] | No Pre-discharge operation available |
| | Panel (P2) onboard relays active | |
| **Fire-2 Level** | Panel Alarm LED illuminates | |
| | Panel piezo (sounder) on steady | |
| | Alarm state entered for zone (latching)[3,5,6] | |
| | Pre-discharge state entered for zone (optional)[4] | No Pre-discharge operation available |
| | Panel (P2) onboard relays active | |

[1] Panel will clear when obscuration level in the VESDA detector drops below set fire levels (Alert and Action), unless the VESDA detector is set to latch at that level.

[2] If panel is silenced at the **Alert** level, the panel LED and Piezo will NOT resound when **Action** level is reached.

[3] Alarm is always a latching event at the panel whether the VESDA is configured to latch on Alarm or not. Panel will need to be reset after obscuration level drops below the **Fire-1** or **Fire-2** level in the VESDA detector to clear the event.

[4] If the panel is configured to initiate a Pre-discharge event upon the VESDA detector reaching **Fire-1** or **Fire-2** level, the VESDA detector now counts toward the panel's Release state. Refer to Section 4.2.3.6 for possible release configurations.

[5] When VESDA **Fire-2** level is reached, the panel will record the event in history but will not issue a new event.

[6] Since this is a new fire level, panel audible and NACs will resound if they were silenced at previous level.

[7] Panel will initiate a supervisory state as well if it has been configured for DACT-Supervisory annunciation. Refer to Section 5.1.1.

### 5.1.1. DACT Supervisory Annunciation

The Cheetah Xi and CyberCat control panels can be configured to initiate a Supervisory event for the zone assigned to the VESDA detector upon reaching Alert or Action level. This feature provides a means to transmit a supervisory code via the DACT to a remote monitoring station for monitoring purposes. This operation can only be used if the VESDA detector is configured to initiate an Alarm state when the VESDA detector reaches the Fire-1 level. By default this operational feature is disabled in the panel and can only be enabled by entering a factory level password. Refer to Section 4.2.3.4.2.

## 5.2. Supervisory on VESDA Fire-1

If the Cheetah Xi or CyberCat control panel is configured to initiate a **Supervisory** state when the VESDA detector reaches the Fire-1 level, the following levels and states will be seen and activated on the panel:

| | Cheetah Xi | CyberCat |
|---|---|---|
| **Alert Level** | Panel Trouble LED illuminates | Panel Trouble and Pre-Alarm 1 LEDs illuminate |
| | Panel piezo (sounder) on steady | |
| | Trouble state initiated for zone (non-latching)[1] | Pre-Alarm 1 state initiated for zone (non-latching)[1] |
| | Panel (P2) onboard relays inactive | |
| **Action Level** | Panel Trouble LED illuminates | Panel Trouble and Pre-Alarm 2 LEDs illuminate |
| | Panel piezo (sounder) on steady[2] | |
| | Trouble state initiated for zone (non-latching)[1] | Pre-Alarm 2 state initiated for zone (non-latching)[1] |
| | Panel (P2) onboard relays inactive | |
| **Fire-1 Level** | Panel Trouble and Supervisory LEDs illuminate | Panel Trouble, Supervisory and Pre-Alarm LEDs illuminate |
| | Panel piezo (sounder) on supervisory pattern (warble)[3] | |
| | Supervisory state entered for zone (non-latching)[1,5] | |
| | Panel (P2) onboard Supervisory relay active | |
| **Fire-2 Level** | Panel Trouble and Supervisory LEDs illuminate | Panel Trouble, Supervisory, and Pre-Alarm LEDs illuminate |
| | Panel piezo (sounder) on supervisory pattern (warble)[3] | |
| | Supervisory state entered for zone (non-latching)[1,4,5] | |
| | Panel (P2) onboard Supervisory relay active | |

[1] Panel will clear when obscuration level in the VESDA detector drops below set fire levels (Alert, Action, Fire-1, Fire-2), unless the VESDA detector is set to latch at that level.

[2] If the panel is silenced at the **Alert** level, the panel LED and Piezo will NOT resound when **Action** level is reached.

[3] Since this is a new fire level, panel audibles and NACs will resound if they were silenced at previous fire level.

[4] When VESDA **Fire-2** level is reached, the panel will record the event in history but will not issue a new event.

[5] Notification appliance circuits (NAC) will only sound if programmed for "Supervisory" for the VESDA zone.

**NOTE:** When configured for "Supervisory" operation, the VESDA detector cannot be configured to participate in Pre-discharge operation.

## 5.3. Silence & Acknowledge Switches

When the VESDA display goes into alarm it will turn on a pulsing audio alert (Alert and Action levels) or a steady audio alert (Fire-1 and Fire-2 levels). It will also flash the LEDs for the activated alarm levels. The Fike control panel will send a silence command to the VESDA when either the panel's SILENCE or ACKNOWLEDGE switch is pressed. The VESDA display will acknowledge receipt of the silence command by turning off the audio alert and placing the LEDs in a steady on condition.

## 5.4. Reset Switch

The Cheetah Xi and CyberCat panels will send a single reset command to the HLI following its own reset. A command is sent for each VESDA detector configured within the control panel. If the VESDA is neither in alarm or trouble, the reset is not noticeable on the VESDA detector. If the VESDA is isolated, only a de-isolate command can take it out of the isolated condition.

## 5.5. VESDA Virtual Address

The Cheetah Xi and CyberCat control panels allow each VESDA detector to be assigned to a virtual address on the panel's addressable loop (SLC). This scheme enables a graphic annunciator to assign an LED to turn on or for the PC Graphic (Precise Vision) to respond to an Alarm or Trouble event for the VESDA device occupying the virtual address. The virtual address does not require a physical component on the SLC loop. It does require a virtual address that cannot be used for any other physical device on the SLC loop.

In order to meet this requirement without reducing the actual number of devices that can be connected to the SLC, the VESDA detector can be assigned to any device address on any of the panel's addressable loops (1-4) even if the loop does not physically exist on the panel. For example: On a Cheetah Xi 50 panel, which has a single loop capable of supporting a maximum of 50 devices on the SLC, it is possible to assign the virtual address for the VESDA detector to an address that exceeds the 50 point limit or to a device address on loops 2 – 4, which do not physically exist on the panel (e.g., loop 04, address 001).

## 5.6. VESDA Participation In Panel's Positive Alarm Sequence (PAS) Operation

When positive alarm sequencing is enabled in the Cheetah Xi and CyberCat panels, then by default, all VESDA detectors will initiate the panel's PAS operation; however, PAS activation is tied solely to the activation of the base detector. Detectors that are capable of supporting detection via multiple sampling tubes/pipes (i.e., VLS, VLF and VEA) will not take the PAS operation into the next state in response to individual tube/pipe activation.

# 6. PANEL EVENT DISPLAY

Fike panels (Cheetah Xi and CyberCat) will poll the HLI, which will then transmit all VESDAnet information (e.g., smoke alarm levels, current airflow status, smoke level status, fault status, etc.) intelligently to the control panel. The control panel will display the event information as described in this section. Refer to Appendix 1 for a complete listing of the VESDA event messages and potential resolutions.

**NOTE:** Each VESDA detector can be programmed to create either an Alarm state or Supervisory state at the control panel upon activation. Refer to Section 5 for description of panel operation for each state.

## 6.1. Alarm Event

The Cheetah Xi and CyberCat control panels will display an event/history message when a VESDA detector reaches any of its four set Alarm levels (i.e., ALERT, ACTION, FIRE-1, and FIRE-2).

| | 1 | 2 | 3 | 4 | 5 | 6 | 7 | 8 | 9 | 0 | 1 | 2 | 3 | 4 | 5 | 6 | 7 | 8 | 9 | 0 |
|---|---|---|---|---|---|---|---|---|---|---|---|---|---|---|---|---|---|---|---|---|
| A | **A** | **L** | **E** | **R** | **T** | | **L** | **E** | **V** | **E** | **L** | **:** | | | | **V** | **Z** | **0** | **0** | **1** |
| B | **C** | **U** | **S** | **T** | **O** | **M** | | **M** | **E** | **S** | **S** | **A** | **G** | **E** | | **V** | **Z** | **0** | **0** | **1** |
| C | **H** | **H** | **:** | **M** | **M** | **:** | **S** | **S** | **P** | | **M** | **M** | **/** | **D** | **D** | **/** | **Y** | **Y** | **Y** | **Y** |
| D | | **E** | **V** | **E** | **N** | **T** | | **0** | **0** | **0** | **4** | | **O** | **F** | | **0** | **0** | **0** | **4** | |

**Figure 20 – Alarm Event Screen**

- Row A – Current active VESDA detector Alarm level (ALERT, ACTION, FIRE-1, and FIRE-2)
- Row A (VZ) - VESDA zone (detector) number
- Row B - Custom message programmed for this VESDA detector. Press the F1 key to toggle between the VESDA custom message and the panel custom message.
- Row C - Time and date stamp for this event
- Row D - Event number and total events on panel

### 6.1.1. Alarm Clearing Event

If the obscuration of the VESDA detector drops back down below the active Alarm level, the event will clear and the following event/history message is displayed.

| | 1 | 2 | 3 | 4 | 5 | 6 | 7 | 8 | 9 | 0 | 1 | 2 | 3 | 4 | 5 | 6 | 7 | 8 | 9 | 0 |
|---|---|---|---|---|---|---|---|---|---|---|---|---|---|---|---|---|---|---|---|---|
| A | A | L | E | R | T | | C | L | E | A | R | : | | | | V | Z | 0 | 0 | 1 |
| B | C | U | S | T | O | M | | M | E | S | S | A | G | E | | V | Z | 0 | 0 | 1 |
| C | H | H | : | M | M | : | S | S | P | | M | M | / | D | D | / | Y | Y | Y | Y |
| D | | E | V | E | N | T | | 0 | 0 | 0 | 4 | | O | F | | 0 | 0 | 0 | 4 | |

**Figure 21 – Alarm Event Clear Screen**

- Row A – Active VESDA Alarm has cleared level (ALERT, ACTION, FIRE-1, and FIRE-2).
- Row A (VZ) - VESDA zone (detector) number
- Row B - Custom message programmed for this VESDA detector. Press the F1 key to toggle between the VESDA custom message and the panel custom message.
- Row C - Time and date stamp for this event
- Row D - Event number and total events on panel

**NOTE:** Upon reaching the ALERT or ACTION level, the VESDA will cause a trouble and a Pre-Alarm on the control panel. The panel will self-restore to normal when the VESDA drops below the ALERT or ACTION level.

**NOTE:** If the FIRE-1 or FIRE-2 level activates as an Alarm, it is latching and no clear (restoration) message for this level will occur.

### 6.1.2. Sector Alarm Event

VESDA VLS, VLF-15 and VEA detectors can monitor and individually report the status of their multiple sectors (pipes). The Cheetah Xi and CyberCat panels will display an event/history message when a VESDA detector reaches any of its set Alarm levels in any of its sectors.

| | 1 | 2 | 3 | 4 | 5 | 6 | 7 | 8 | 9 | 0 | 1 | 2 | 3 | 4 | 5 | 6 | 7 | 8 | 9 | 0 |
|---|---|---|---|---|---|---|---|---|---|---|---|---|---|---|---|---|---|---|---|---|
| A | A | L | E | R | T | | S | E | C | T | O | R | | 0 | 0 | 1 | - | 0 | 0 | 1 |
| B | C | U | S | T | O | M | | M | E | S | S | A | G | E | | V | Z | 0 | 0 | 1 |
| C | H | H | : | M | M | : | S | S | P | | M | M | / | D | D | / | Y | Y | Y | Y |
| D | | E | V | E | N | T | | 0 | 0 | 0 | 4 | | O | F | | 0 | 0 | 0 | 4 | |

**Figure 22 – Sector Alarm Event Screen**

- Row A – Current active sector Alarm level (ALERT SECTOR, ACTION SECTR, FIRE-1 SECTR, and FIRE-2 SECTR) / VESDA zone (detector) number - sector number
- Row B - Custom message programmed for this VESDA detector. Press the F1 key to toggle between the VESDA custom message and the panel custom message.
- Row C - Time and date stamp for this event
- Row D - Event number and total events on panel

**NOTE:** VESDA LaserScanner detectors with manufacturer date code older than 2004 will not communicate sector data through the Modbus HLI unless all pipes are used.

### 6.1.3. Sector Alarm Clearing Event

If the obscuration of the VESDA detector drops back down below the active Alarm level, the event will clear and the following event/history message will appear.

| | 1 | 2 | 3 | 4 | 5 | 6 | 7 | 8 | 9 | 0 | 1 | 2 | 3 | 4 | 5 | 6 | 7 | 8 | 9 | 0 |
|---|---|---|---|---|---|---|---|---|---|---|---|---|---|---|---|---|---|---|---|---|
| A | A | L | E | R | T | | S | E | C | | C | L | | 0 | 0 | 1 | - | 0 | 0 | 1 |
| B | C | U | S | T | O | M | | M | E | S | S | A | G | E | | V | Z | 0 | 0 | 1 |
| C | H | H | : | M | M | : | S | S | P | | M | M | / | D | D | / | Y | Y | Y | Y |
| D | | E | V | E | N | T | | 0 | 0 | 0 | 4 | | O | F | | 0 | 0 | 0 | 4 | |

**Figure 23 – Sector Alarm Event Clear Screen**

- Row A – Active VESDA Sector Alarm level has cleared (ALERT SEC CL, ACTIONSE CL, FIRE-1 SE CL, and FIRE-2 SE CL) / VESDA zone (detector) number - Sector number.
- Row B - Custom message programmed for this VESDA detector. Press the F1 key to toggle between the VESDA custom message and the panel custom message.
- Row C - Time and date stamp for this event
- Row D - Event number and total events on panel

**NOTE:** Upon reaching the SECTOR ALERT or SECTOR ACTION level, the VESDA will cause a trouble and a Pre-Alarm on the control panel. The panel will self-restore to normal when the VESDA drops below the SECTOR ALERT or SECTOR ACTION level.

**NOTE:** If the SECTOR FIRE-1 or FIRE-2 level activates as an Alarm, it is latching and no restoration message for this level will occur.

## 6.2. Trouble Event

The Cheetah Xi and CyberCat control panels will display a trouble event/history message when a VESDA fault occurs. While each VESDA detector is capable of generating numerous fault codes, the Cheetah Xi and CyberCat panels will not display a distinct event message for each code. The panel will display and record a generic "MINOR" or "URGENT" event/history message for each VESDA fault based on the fault type.

| | 1 | 2 | 3 | 4 | 5 | 6 | 7 | 8 | 9 | 0 | 1 | 2 | 3 | 4 | 5 | 6 | 7 | 8 | 9 | 0 |
|---|---|---|---|---|---|---|---|---|---|---|---|---|---|---|---|---|---|---|---|---|
| A | U | R | G | E | N | T | | F | A | U | L | T | : | | | V | Z | 0 | 0 | 0 |
| B | H | I | G | H | | L | E | V | E | L | | I | N | T | E | R | F | A | C | E |
| C | H | H | : | M | M | : | S | S | P | | M | M | / | D | D | / | Y | Y | Y | Y |
| D | | E | V | E | N | T | | 0 | 0 | 0 | 4 | | O | F | | 0 | 0 | 0 | 4 | |

**Figure 24 – Trouble Event Screen**

- Row A – Active VESDA fault (MINOR or URGENT)

> **NOTE:** Refer to Section 7.1.2 "VESDA-2 DIAGNOSTICS" for instructions on how to view the current list of VESDA fault codes for the detector.

- Row B – Displays the VESDA custom message "HIGH LEVEL INTERFACE". Press the F1 key to toggle between the VESDA custom message and the panel custom message which can be used to identify the panel the HLI is connected to.
- Row C - Time and date stamp for this event
- Row D - Event number and total events on panel

### 6.2.1. Trouble Clearing Event

If the condition causing the VESDA fault is corrected, the event will clear and the following event/history message will appear.

| | 1 | 2 | 3 | 4 | 5 | 6 | 7 | 8 | 9 | 0 | 1 | 2 | 3 | 4 | 5 | 6 | 7 | 8 | 9 | 0 |
|---|---|---|---|---|---|---|---|---|---|---|---|---|---|---|---|---|---|---|---|---|
| A | U | R | G | E | N | T | | F | | C | L | R | : | | | V | Z | 0 | 0 | 0 |
| B | H | I | G | H | | L | E | V | E | L | | I | N | T | E | R | F | A | C | E |
| C | H | H | : | M | M | : | S | S | P | | M | M | / | D | D | / | Y | Y | Y | Y |
| D | | E | V | E | N | T | | 0 | 0 | 0 | 4 | | O | F | | 0 | 0 | 0 | 4 | |

**Figure 25 – Trouble Event Clear Screen**

- Row A – Active VESDA fault (MINOR or URGENT) has cleared
- Row B – Displays the VESDA custom message "HIGH LEVEL INTERFACE". Press the F1 key to toggle between the VESDA custom message and the panel custom message which can be used to identify the panel the HLI is connected to.
- Row C - Time and date stamp for this event
- Row D - Event number and total events on panel

> **NOTE:** All VESDA trouble events, except for "VESDA CFG ERR", will issue a clearing event when the condition causing the fault is corrected. However, the panel will self-restore to normal without issuing a clearing event when the condition causing the "VESDA CFG ERR" is corrected.

# 7. DIAGNOSTICS

The Cheetah Xi and CyberCat's Diagnostics Menus are designed to assist the service technician in isolating and correcting hardware faults with the system. A Level 1 or higher password is required to access the diagnostic screens. Once you have isolated the cause of the problem (main board or field device), you can use the diagnostic menu features to further identify the problem. The service of the Cheetah Xi or CyberCat systems shall be performed solely by factory certified and qualified technicians that possess a complete understanding of the system hardware and functions.

## 7.1. Diagnostic Menu 2

Diagnostic Menu 2 provides several options that are used to diagnose problems associated with the VESDA detectors.

| | 1 | 2 | 3 | 4 | 5 | 6 | 7 | 8 | 9 | 0 | 1 | 2 | 3 | 4 | 5 | 6 | 7 | 8 | 9 | 0 |
|---|---|---|---|---|---|---|---|---|---|---|---|---|---|---|---|---|---|---|---|---|
| A | | D | I | A | G | N | O | S | T | I | C | | M | E | N | U | | 2 | | |
| B | F | 1 | - | K | E | Y | P | A | D | | | F | 4 | - | P | E | R | I | P | H |
| C | F | 2 | - | V | E | S | D | A | | 1 | | F | 5 | - | V | E | | C | O | M |
| D | F | 3 | - | V | E | S | D | A | | 2 | | F | 6 | - | M | E | N | U | | 3 |

**Figure 26 – Diagnostic Menu 2 Screen**

Press the corresponding function key to display the selected diagnostic screen:

**F1** = Keypad Diagnostics

**F2** = VESDA 1 Diagnostics

**F3** = VESDA 2 Diagnostics

**F4** = Peripheral Diagnostics

**F5** = VESDAnet Communications

**F6** = Diagnostics Menu 3

### 7.1.1. F2 - VESDA 1 Diagnostics

From Diagnostic Menu 2 screen, press the F2 key to view the VESDA 1 Diagnostic screen. This screen is used to view the current status of the selected VESDA detector.

| | 1 | 2 | 3 | 4 | 5 | 6 | 7 | 8 | 9 | 0 | 1 | 2 | 3 | 4 | 5 | 6 | 7 | 8 | 9 | 0 |
|---|---|---|---|---|---|---|---|---|---|---|---|---|---|---|---|---|---|---|---|---|
| A | V | E | S | D | A | | Z | O | N | E | | N | U | M | : | | 0 | 0 | 1 | |
| B | S | T | A | T | U | S | : | - | | - | - | | - | - | | - | - | - | - | - |
| C | C | U | R | R | E | N | T | : | 0 | . | 0 | 0 | 0 | 0 | % | / | F | T | | |
| D | A | L | A | R | M | | L | E | V | E | L | : | 0 | 0 | 0 | % | | | S | |

**Figure 27 – VESDA 1 Diagnostics Screen**

- Row A - Allows you to select the VESDA zone number to read. Use the ◄► arrow buttons to position the cursor in ones, tens, or hundreds field; then press the +/– buttons to change the value at cursor. Press ENTER button to read the detector.
- Row B (STATUS) - Displays all "-" if no VESDA is present at the VESDA zone number selected in Row A or if the detector has not be read by pressing the ENTER button. After detector is read, the "-" will be replaced with the following detector information:
  - The first "-" indicates the enabled or disabled state of the detector. "E" = enabled and "D" = disabled. "D" occurs when the user presses the ISOLATE switch on the VESDA detector itself.
  - The next "- -" will display "UF" if an urgent fault is present on the detector.
  - The next "- -" will display "mF" if a minor fault is present on the detectors.
  - The next "- - - - -" will display the current activation level for the detector: "NORML" or "ALERT" or "ACTON" or "FIRE1" or "FIRE2".
- Row C (CURRENT) – Displays the current obscuration level being seen by the VESDA detector selected in Row A. This updates upon each press of ENTER button (noted in %/ft value).
- Row D (ALARM) – Displays the current percentage of alarm level for the detector selected in Row A.
- Row D (S) – Displays an "S" if the VESDA detector (VLS, VFT-15, VEA) is in the scanning mode. Blank otherwise.

### 7.1.2. F3 - VESDA 2 Diagnostics

From Diagnostic Menu 2 screen, press the F3 key to view the VESDA 2 Diagnostic screen. This screen is used to view the current fault list for the selected VESDA detector.

| | 1 | 2 | 3 | 4 | 5 | 6 | 7 | 8 | 9 | 0 | 1 | 2 | 3 | 4 | 5 | 6 | 7 | 8 | 9 | 0 |
|---|---|---|---|---|---|---|---|---|---|---|---|---|---|---|---|---|---|---|---|---|
| A | V | E | S | D | A | | Z | O | N | E | | N | U | M | : | | 0 | 0 | 1 | |
| B | T | Y | P | E | : | V | L | S | - | - | - | / | V | L | S | - | - | - | - | |
| C | 0 | 4 | | - | - | | - | - | | - | - | | - | - | | - | - | | - | - |
| D | - | - | | - | - | | - | - | | - | - | | - | - | | - | - | | - | - |

**Figure 28 – VESDA 2 Diagnostics Screen**

- Row A - Allows you to select the VESDA zone number to view. Use the ◄► arrow buttons to position the cursor in ones, tens, or hundreds field; then press the +/– buttons to change the value at cursor. Press ENTER button to read the detector.
- Row B (TYPE) - Dashes on the left display the VESDA detector type (i.e., VLC, VLP, VLS, VLF, VLI, VFT-15, VEP, VEP-1, VEP-2, VEU and VEA-40) for the zone number selected in Row A. Dashes on the right display the VESDA detector type read from the HLI.

> **NOTE:** When the HLI zone number is selected (zone 247), the word "SYSTEM" will appear on the left side. Press the ENTER button will display system level fault codes in Rows C & D. The type dashes on the right remain unchanged.

- Rows C & D - Displays the active faults transmitted by the VESDA HLI. Refer to Appendix 2 for a list of the VESDA fault codes, fault description and potential resolution. Fault codes displayed by the Cheetah Xi and CyberCat panels for VESDA E-series (VEU, VEA, VEP) and VFT detectors do not reflect the actual faults occurring at the VESDA detector. The VESDA VSC software must be used to identify the actual detector fault codes and potential resolutions.

### 7.1.3. F5 - VESDAnet Communications

From the Diagnostic Menu 2 screen, press the F5 key to view the VESDAnet Communications screen. This screen is used to view the communication status between the CyberCat/Cheetah Xi controller and the VESDA high level interface (HLI).

| | 1 | 2 | 3 | 4 | 5 | 6 | 7 | 8 | 9 | 0 | 1 | 2 | 3 | 4 | 5 | 6 | 7 | 8 | 9 | 0 |
|---|---|---|---|---|---|---|---|---|---|---|---|---|---|---|---|---|---|---|---|---|
| A | V | E | S | D | A | | Z | O | N | E | | N | U | M | : | | 0 | 0 | 1 | |
| B | P | O | L | L | | T | X | : | 0 | 0 | 0 | 0 | | R | X | : | 0 | 0 | 0 | 0 |
| C | N | E | T | W | | T | X | : | 0 | 0 | 0 | 0 | | R | X | : | 0 | 0 | 0 | 0 |
| D | C | O | M | M | | I | N | T | E | R | V | A | L | : | 1 | 0 | 0 | 0 | M | S |

**Figure 29 – VESDA Communication Screen**

- Row A – Allows you to select the VESDA zone (device) number to display.
- Row B (Poll TX) – Displays the number of polling transmissions sent to the VESDA zone selected on Row A.
- Row B (Poll RX) – Displays the number of polling receptions received from the VESDA zone selected in Row A.
- Row C (Netw TX) – Displays the number of network requests sent from the panel to the HLI.
- Row C (Netw RX) – Displays the number of network responses sent from the HLI to the panel.
- Row D (COMM INTERVAL) - Displays the communication rate between the control panel and the VESDA HLI.

Pressing the ENTER key while in this screen will clear the TX and RX counters.

Pressing the F1 key while in this screen will prompt you to “PRESS ENTER TO REFRESH HLI”. This will reset the HLI without having to reset the control panel.

# APPENDIX 1 - CHEETAH Xi AND CYBERCAT VESDA EVENT MESSAGES

The following event messages will be displayed by the Cheetah Xi and CyberCat panels in response to Alarm events and faults associated with the VESDA detectors connected to the panel via the HLI interface.

| PANEL EVENT MESSAGE | EVENT DESCRIPTION | POTENTIAL RESOLUTION |
|---|---|---|
| ACTION LEVEL: VZ zzz | The smoke level being seen by the VESDA detector (zone), identified by "VZ zzz", has exceeded the threshold value set for "ACTION".<br>This indicates that the detector has identified the early stages of a fire condition, but is not intended to initiate a general fire alarm response. | Locate VESDA Zone "zzz" and determine the cause for the elevated obscuration. |
| ACTION CLEAR: VZ zzz | The smoke level being seen by the VESDA detector (zone), identified by "VZ zzz", has dropped below the previously reached "ACTION" level threshold. | Note the cause of the event in the Event Log. |
| ACTION SECTR zzz-sss | The smoke level being seen by the VESDA detector (zone), identified by "zzz", has exceeded the threshold value set for "ACTION" in the pipe (sector) identified by "sss".<br>This indicates that the detector has identified the early stages of a fire condition, but is not intended to initiate a general fire alarm response. | Locate VESDA Zone "zzz" and Sector "sss" and determine the cause for the elevated obscuration. |
| ACTION SE CL zzz-sss | The smoke level being seen by the VESDA detector (zone), identified by "zzz", has dropped below the previously reached "ACTION" level threshold in pipe (sector) "sss". | Note the cause of the event in the Event Log. |
| ALERT LEVEL: VZ zzz | The smoke level being seen by the VESDA detector (zone), identified by "VZ zzz", has exceeded the threshold value set for "ALERT".<br>This indicates that the detector has identified the very early stages of a fire condition and/or that the smoke level in the area is above normal. | Locate VESDA Zone "zzz" and determine the cause for the elevated obscuration. |

| PANEL EVENT MESSAGE | EVENT DESCRIPTION | POTENTIAL RESOLUTION |
|---|---|---|
| ALERT CLEAR: VZ zzz | The smoke level being seen by the VESDA detector (zone), identified by "VZ zzz", has dropped below the previously reached "ALERT" level threshold. | Note the cause of the event in the Event Log. |
| ALERT SECTOR zzz-sss | The smoke level being seen by the VESDA detector (zone), identified by "zzz", has exceeded the threshold value set for "ALERT" in the pipe (sector) identified by "sss".<br>This indicates that the detector has identified the very early stages of a fire condition and/or that the smoke level in the area is above normal. | Locate VESDA Zone "zzz" and Sector "sss" and determine the cause for the elevated obscuration. |
| ALERT SEC CL zzz-sss | The smoke level being seen by the VESDA detector (zone), identified by "zzz", has dropped below the previously reached "ALERT" level threshold in pipe (sector) "sss". | Note the cause of the event in the Event Log. |
| FIRE-1 LEVEL: VZ zzz | The smoke level being seen by the VESDA detector (zone), identified by "zzz", has exceeded the threshold value set for "FIRE 1".<br>This indicates a fire may be imminent or is in progress. | Locate VESDA Zone "zzz" and determine the cause of the fire event. |
| FIRE-1 CLEAR: VZ zzz | The smoke level being seen by the VESDA detector (zone), identified by "VZ zzz", has dropped below the previously reached "FIRE 1" level threshold. | Note the cause of the event in the Event Log. |
| FIRE-1 SECTR zzz-sss | The smoke level being seen by the VESDA detector (zone), identified by "zzz", has exceeded the threshold value set for "FIRE 1" in the pipe (sector) identified by "sss".<br>This indicates a fire may be imminent or is in progress in the area served by pipe (sector) identified by "sss". | Locate VESDA Zone "zzz" and Sector "sss" and determine the cause of the fire event. |
| FIRE-1 SE CL zzz-sss | The smoke level being seen by the VESDA detector (zone), identified by "zzz", has dropped below the previously reached "FIRE 1" level threshold in pipe (sector) "sss". | Note the cause of the event in the Event Log. |

| PANEL EVENT MESSAGE | EVENT DESCRIPTION | POTENTIAL RESOLUTION |
|---|---|---|
| FIRE-2 LEVEL: VZ zzz | The smoke level being seen by the VESDA detector (zone), identified by "zzz", has exceeded the threshold value set for "FIRE 2".<br>This indicates a fire is in progress. | Locate VESDA Zone "zzz" and determine the cause of the fire event. |
| FIRE-2 SECTR zzz-sss | The smoke level being seen by the VESDA detector (zone), identified by "zzz", has exceeded the threshold value set for "FIRE 2" in the pipe (sector) identified by "sss".<br>This indicates a fire is in progress in the area served by pipe (sector) identified by "sss". | Locate VESDA Zone "zzz" and Sector "sss" and determine the cause of the fire event. |
| FIRE-2 SE CL zzz-sss | The smoke level being seen by the VESDA detector (zone), identified by "zzz", has dropped below the previously reached "FIRE 2" level threshold in pipe (sector) "sss". | Note the cause of the event in the Event Log. |
| ISOLATE FAULT: VZ zzz | The VESDA detector (zone), identified by "VZ zzz", has been isolated/disabled.<br>While isolated, the detector (zone) will not communicate with the VESDAnet or the Fike control panel (Cheetah Xi or CyberCat). | Locate VESDA Zone "zzz" and determine reason the detector has been isolated.<br>De-isolate the detector to restore normal communication with the VESDAnet and the Fike control panel. |
| ISOLATE F CLR: VZ zzz | The VESDA detector (zone), identified by "VZ zzz", is no longer isolated. | Note the cause of the event in the Event Log. |
| URGENT FAULT: VZ zzz | The VESDA detector (zone), identified by "VZ zzz", has a developed an "URGENT FAULT" requiring immediate attention. | Use the control panel's VESDA 2 DIAGNOSTICS to view the current fault list for the selected VESDA detector (zone).<br>Locate VESDA Zone "zzz" and connect with VESDA PC software or LCD programmer to diagnose fault.<br>Refer to Appendix 2 for listing of VESDA urgent fault events. |
| URGENT FLT CLR: VZ zzz | The VESDA detector (zone), identified by "VZ zzz", which previously reported "URGENT FAULT" has cleared. | Note the cause and resolution of the fault event in the Event Log. |

| PANEL EVENT MESSAGE | EVENT DESCRIPTION | POTENTIAL RESOLUTION |
|---|---|---|
| MINOR FAULT: VZ zzz | The VESDA detector (zone), identified by “VZ zzz”, has developed a “MINOR FAULT” that should be rectified as soon as is practical. | Use the control panel’s VESDA 2 DIAGNOSTICS to view the current fault list for the selected VESDA detector (zone).<br>Locate VESDA Zone “zzz” and connect with VESDA PC software or LCD programmer to diagnose fault.<br>Refer to Appendix 2 for listing of VESDA minor fault events. |
| MINOR FLT CLR: VZ zzz | The VESDA detector (zone), identified by “VZ zzz”, which previously reported “MINOR FAULT” has cleared. | Note the cause and resolution of the fault event in the Event Log. |
| VESDA CFG ERR: VZ nnn | The VESDA detector (zone), identified by “VZ nnn”, is attached to the system but has been disabled in the Cheetah Xi or CyberCat panel.<br>There is no clearing event for this trouble. | Locate VESDA Zone “nnn” and disconnect it from the system or add the detector into the panel configuration.<br>The panel (Cheetah Xi or CyberCat) must be reset to clear this event. |
| VESDA MISSING: VZ nnn | The VESDA detector (zone), identified by “VZ nnn”, is programmed in the CyberCat/Cheetah Xi panel but is not reporting to the panel through VESDAnet attached to HLI/through P4. | Locate VESDA Zone “nnn” and check if the connection between the panel and the HLI is broken or if the VESDA detector is disconnected from the VESDAnet.<br>Remove this detector from the CyberCat/Cheetah Xi panel configuration if the detector has been removed. |
| VESDA RETURN: VZ nnn | The VESDA detector (zone), identified by “VZ nnn”, that previously reported as “MISSING” is now responding again. | Note the cause and resolution of the fault event in the Event Log. |

# APPENDIX 2 – HLI FAULT LIST

The table below lists all the faults that will be transmitted by the VESDA HLI to the Cheetah Xi and CyberCat control panels along with the fault description associated Fike control panel message, cause of the fault, and action required to fix the fault. Depending upon the type of fault, the Fike control panel will display either an "URGENT FAULT" or "MINOR FAULT" message in response to the fault.

| No. | Fault Description | Control Panel Event Message | Cause | Action |
|---|---|---|---|---|
| 0 | Aspirator failed | Urgent Fault: VZ001 | The detector's aspirator is not working. | Refer to fault 90 |
| 1 | Power supply battery failed | Urgent Fault: VZ001 | There has been a loss of battery power. | Replace battery. |
| 2 | Communications fault on VESDAnet port a | Minor Fault: VZ001 | There is a communications fault at port A. | • Check that the wiring is correct. Tighten connections or repair any break in the wiring. Refer to the detector manual for details.<br>• The location of the fault can be traced because the devices on either side of the loose connection or broken wire will both report a fault.<br>• The device that reported the fault can be determined using the Status scree on the LCD Programmer. For single detector systems, check that the two VESDAnet connectors on the termination card are connected together. Also switch the power off and check all internal connections.<br>• If a system is intentionally wired as an open-ended loop this fault will continue to occur unless the devices on each end of the loop have been configured as open-ended using the programmer. Refer to the Xtralis VESDA LCD Programmer Guide or the PC Software online Help. |
| 3 | Detector failure | Urgent Fault: VZ001 | The detector processor board has a hardware fault. | Call your Xtralis VESDA support person to replace the detector chassis.<br>This fault is generated when the device is connected to the intelligent power supply unit. |

| No. | Fault Description | Control Panel Event Message | Cause | Action |
|---|---|---|---|---|
| 4 | Filter removed | Urgent Fault: VZ001 | The air filter has been removed from the detector. | The filter should be replaced. |
| 5 | Loss of reference detector communication | Minor Fault: VZ001 | The detector has not received any messages from its configured reference detector. | Check to see that the detector is configured to look for the correct reference detector. If this is OK, call you Xtralis VESDA support person. |
| 6 | Power supply DC output failure | Minor Fault: VZ001 | The power supply has a hardware failure. | Call your Xtralis VESDA support person to repair or replace the power supply.<br>Note: This fault relates to the VESDA intelligent power supply unit. For other power supply units refer to respective manufacturer's manuals |
| 7 | Software incident | Urgent Fault: VZ001 | The software is malfunctioning. | Call your Xtralis VESDA support person. |
| 8 | Aspirator speed control failure | Minor Fault: VZ001 | The aspirator cannot continue to run at set speed, because:<br>The set rpm is outside the operating range.<br>Either the aspirator or the speed sensor has failed. | • Set speed should be as indicated by ASPIRE2.<br>• Call your Xtralis VESDA support person |
| 9 | Comms fault on VESDAnet port B | Minor Fault: VZ001 | There is a communications fault at port B. | • Check that the wiring is correct. Tighten connections or repair any break in the wiring.<br>• The location of the fault can be traced because the devices on either side of the loose connection or broken wire will both report the fault.<br>• The device that reported the fault can be determined using the status screen on the LCD Programmer. For single detector systems, check that the two VESDAnet connectors on the termination card are connected together.<br>• If a system is intentionally wired as an open-ended loop this fault will continue to occur unless the devices on each end of the loop have been configured as open-ended using the programmer. Refer to the Xtralis VESDA LCD Programmer Guide or the PC Software online Help |

| No. | Fault Description | Control Panel Event Message | Cause | Action |
|---|---|---|---|---|
| 10 | Led card on display not found | Minor Fault: VZ001 | A display processor is configured to have a display card but cannot find it (or vice-versa). This may be due to a failed connector or an error in the display configuration. | Check that the display card is plugged in then turn the power supply off and on.<br>If the fault persists call your Xtralis VESDA support person to have the display card replaced. |
| 11 | Filter approaching capacity | Minor Fault: VZ001 | The air filter is approaching its capacity. This is based on the amount of dust detected or age of the filter. | The filter must be replaced and the filter counter reset. |
| 12 | Default device configuration | Urgent Fault: VZ001 | The common setup area on the reporting device has either not been altered from the factory defaults or has reverted to the factory defaults. | The fault must be cleared by calling the administrator to select 'Defaults OK' from the factory defaults menu. |
| 13 | More than one detector in VESDAnet zone | Urgent Fault: VZ001 | An error in the system configuration has occurred and more than one Detector has been detected in the zone. | This fault will recur every minute until the fault is cleared. Ensure that each detector is allocated a different VESDA Zone. If the fault continues call your Xtralis VESDA support person. |
| 14 | Flow sensors = factory defaults | Minor Fault: VZ001 | The flow sensor calibration area on the detector has either not been altered from (or has returned to) the factory defaults. | Contact your Xtralis VESDA support person to return the detector for factory calibration |
| 15 | Ac mains failure | Minor Fault: VZ001 | The source supplying AC power has failed, or a fault with an external PSU has been signaled through the GP Input on the Xtralis VESDA detector. | Restore the AC power/batteries. Ensure the GPI mains monitoring option has not been incorrectly set. If the fault persists call your Xtralis VESDA support person. |
| 16 | Relays not found | Urgent Fault: VZ001 | A display or a detector is configured to have a relay card but cannot find it (or vice-versa).<br>This may be due to a failed connector or an error in the display configuration. | Once the fault is corrected this fault can be cleared by turning the power supply off and on or pressing the reset button. Ensure the number of relays configured match the number of installed relays. If the fault persists call your Xtralis VESDA support person. |

| No. | Fault Description | Control Panel Event Message | Cause | Action |
|---|---|---|---|---|
| 17 | No communications from detector | Urgent Fault: VZ001 | A display has not received the regular 'health check' message from its detector.<br>The detector may not be configured correctly or the wiring may be faulty.<br>Alternatively, the detector in the zone may have failed. | Call your Administrator to check the configuration of the system.<br>Arrange for the wiring to be checked. Refer to the detector manual. If the configuration and wiring are OK, call your Xtralis VESDA support person. |
| 18 | Too many VESDAnet devices in one zone | Minor Fault: VZ001 | There may be more than 20 devices in the zone. | Call the system Administrator to alter the number of devices configured in this zone. |
| 19 | Flow sensor failure in pipe 4 | Minor Fault: VZ001 | The flow sensor on pipe 4 has failed. | Check the flow sensor cable loom is properly connected between the main chaise and the pipe inlet manifold. If fault persists, call your Xtralis VESDA support person to replace the flow sensor and manifold. |
| 20 | Flow sensor failure in pipe 3 | Minor Fault: VZ001 | The flow sensor on pipe 3 has failed. | Refer to fault 19 |
| 21 | Flow sensor failure in pipe 2 | Minor Fault: VZ001 | The flow sensor on pipe 2 has failed. | Refer to fault 19 |
| 22 | Flow sensor failure in pipe 1 | Minor Fault: VZ001 | The flow sensor on pipe 1 has failed. | Refer to fault 19 |
| 23 | Laser signal too low | Urgent Fault: VZ001 | The detector's pre-processor has detected a loss of smoke level signal. | Call your Xtralis VESDA support person for a replacement detector. |
| 24 | No communication from display or relay device | Urgent Fault: VZ001 | One of the displays in a detector's zone has not sent its regular health check message.<br>This will occur if the display has failed or has been disconnected. | • If the display has been disconnected or a new one installed use the rebuild list option to clear the fault.<br>• If the display has failed, call your Xtralis VESDA support person to repair or replace the display. Do not use rebuild list. |

| No. | Fault Description | Control Panel Event Message | Cause | Action |
|---|---|---|---|---|
| 25 | Comms on port a while configured as open | Minor Fault: VZ001 | Devices on the sys-tem can be configured as open-ended on one port. If a device such as an LCD Programmer or a HLI is attached to this port this fault will be reported. This fault will also be reported if there has been an error in the system configuration. | • If this fault is due to the temporary plugging in of an LCD Programmer or HLI, the fault will be cleared when the device is removed (If the devices have been programmed as non-latching). If however the devices have been programmed as latch-ing it is necessary to reset after the fault condition is removed.<br>• Check that if there is communications on both A and B ports, that open port should be set to none. |
| 26 | Comms on port b while configured as open | Minor Fault: VZ001 | Devices on the sys-tem can be configured as open-ended on one port. If a device such as an LCD Programmer or HLI is attached to this port this fault will be reported. This fault will also be reported if there has been an error in the system configuration. | See Fault 25 |
| 27 | AutoLearn smoke aborted | Urgent Fault: VZ001 | AutoLearn has been aborted/interrupted before the set time | After the cause of the interruption has been determined, AutoLearn can be restarted. |
| 28 | VLS option misconfigured | Urgent Fault: VZ001 | A non-Scanner dis- play has been put into a zone with a scanner detector or vice versa<br>The scanner valve cable is disconnected | Check that all displays in a zone match the detectors in that zone. That is, if the detector in a zone has the scanner option all displays for that zone must be scanner displays<br>Ensure the scanner valve cable is connected to the M.P.C. |
| 29 | Manufacturer setup corrupted | Urgent Fault: VZ001 | The manufacturer setup on the reporting device has either not been altered from the factory defaults or has reverted to the factory defaults. | Call your Xtralis VESDA support person. |

| No. | Fault Description | Control Panel Event Message | Cause | Action |
|---|---|---|---|---|
| 30 | Relay configuration = factory defaults | Urgent Fault: VZ001 | The part of the setup that determines which relays correspond to which condition has not been altered from default settings, or has reverted to the defaults. This may be because corruption of the system has been detected. | Refer to the Xtralis VESDA LCD Programmer Guide or the PC Software online help for details on how to accept the factory defaults. If the problem persists, call your nearest Xtralis VESDA support person.<br>Note: Note: If this fault is due to a scanner display's zone having been changed, set- ting the relay assignment to that for the new zone will clear the fault. |
| 31 | Relay state = factory defaults | Urgent Fault: VZ001 | The part of the Relay setup that deter- mines the startup set- tings has not been changed from the default settings or has reverted to these set- tings. | Refer to the Xtralis VESDA LCD Programmer Guide or the PC Software online Help for details on how to accept the factory defaults. If the problem persists, call your Xtralis VESDA support person. |
| 32 | Time synchronization fault | Minor Fault: VZ001 | The internal clock on all devices in the system are checked daily. If the time on any device has drifted by more than one minute this fault will be reported. | The system Administrator should check the time settings on the devices. Set the new time as a global function. If this drift in time continues to occur, call your Xtralis VESDA support person. This fault may occur on the first day of use if the clocks are not synchronized under the set date and time menu of the system all devices menu. |
| 33 | Default pin table | Minor Fault: VZ001 | The user list has not been changed from the default settings or has reverted to the defaults. This may be because corruption of the system has been detected. | The system Administrator is required to OK the use of the defaults or to alter the user list.<br>Refer to the Xtralis VESDA LCD Programmer Guide or the PC Software online Help for details. |
| 34 | Detector setup = factory defaults | Urgent Fault: VZ001 | The Detector setup has not been changed from the default settings or has reverted to the defaults. This may be because corruption of the system has been detected. | The system Administrator is required to OK the use of the defaults. Refer to the Xtralis VESDA LCD Programmer Guide or the PC Software online Help. If the problem persists, call your Xtralis VESDA support person.<br>Note: Note that the detector alarm thresh- olds and other configurations are kept in the detector setup area. If this fault occurs you will have to reset all detector configuration parameters. |

| No. | Fault Description | Control Panel Event Message | Cause | Action |
|---|---|---|---|---|
| 35 | Programmer setup = factory defaults | Minor Fault: VZ001 | The programmer set- tings have not been changed from the default settings or has reverted to the defaults. This may be because corruption of the system has been detected. | The system Administrator is required to OK the use of the defaults or to alter the settings. Refer to the Xtralis VESDA LCD Programmer Guide. If the problem persists, call your Xtra lis VESDA support person. |
| 36 | Detector event log corrupt | Minor Fault: VZ001 | The detector event log has been corrupted and has been cleared. | If this fault persists call your Xtralis VESDA support person. |
| 37 | Detector Cal = factory defaults | Urgent Fault: VZ001 | The detector calibration has not been changed from the default settings or has reverted to the defaults. This may be because the data has been detected as being corrupt. | Call your Xtralis VESDA support person. Your system may not detect smoke correctly. |
| 38 | Detector EEPROM failure | Minor Fault: VZ001 | The detector data storage area has not been changed from the default settings or has reverted to the defaults. This may be because the data has been detected as being corrupt. | Refer to the Xtralis VESDA LCD Programmer Guide or the PC Software online Help for instructions on how to accept the factory defaults. If this problem persists call your Xtralis VESDA support person.<br>Note that the filter life information is kept in this storage area. If this fault occurs, the filter life count will be set to zero. |
| 39 | Major high airflow pipe 4 | Urgent Fault: VZ001 | The airflow in the pipe of the detector has exceeded the 'High Urgent' threshold.<br>This may be because the aspirator setting has been changed or because there is a break in the pipe. | If the aspirator setting has been changed the system Administrator must be called to Normalize the air flow. If this does not rectify the problem a contractor should examine and repair any broken air sampling pipes. |
| 40 | Minor high airflow pipe 4 | Minor Fault: VZ001 | The airflow in the pipe has exceeded the 'High Minor' thresh- old. This may be because the aspirator setting has been changed or because there is a change in the flow in the pipe. | If the aspirator setting has been changed the system Administrator must be called to normalize the air flow. If the fault continues to occur a contractor should be called to exam- ine the pipe and repair any abnormalities. |

| No. | Fault Description | Control Panel Event Message | Cause | Action |
|---|---|---|---|---|
| 41 | Minor low airflow pipe 4 | Minor Fault: VZ001 | The airflow in the pipe has dropped below the 'Low Minor' threshold. This may be because the aspirator setting has been changed or because some sampling holes are becoming obstructed. | If the aspirator setting has been changed the system Administrator must be called to Normalize the air flow. If the problem is not the aspirator setting, call a contractor to clean the sampling points. The sampling points should be cleaned with a suit able implement. |
| 42 | Major low airflow pipe 4 | Urgent Fault: VZ001 | The airflow in the pipe is below the 'Low Urgent' threshold.<br>This may be because:<br>the aspirator set- ting has been changed; or<br>there is a blockage in the pipe; or<br>all pipes may be selected as "not in use" | If the aspirator setting has been changed the system Administrator must be called to normalize the air flow. If the aspirator setting has not been changed call a contractor to check for blockages in the pipe.<br>Check the number of pipes as selected "in use". Refer to the Xtralis VESDA LCD Programmer Guide or the PC Software online Help for instructions on how to select pipes and Normalize the airflow. |
| 43 | Major high airflow pipe 3 | Urgent Fault: VZ001 | Refer to Fault 39 | Refer to Fault 39 |
| 44 | Minor high airflow pipe 3 | Minor Fault: VZ001 | Refer to Fault 40 | Refer to Fault 40 |
| 45 | Minor low airflow pipe 3 | Minor Fault: VZ001 | Refer to Fault 41 | Refer to Fault 41 |
| 46 | Major low airflow pipe 3 | Urgent Fault: VZ001 | Refer to fault 42 | Refer to fault 42 |
| 47 | Major high airflow pipe 2 | Urgent Fault: VZ001 | Refer to Fault 39 | Refer to Fault 39 |
| 48 | Minor high airflow pipe 2 | Minor Fault: VZ001 | Refer to Fault 40 | Refer to Fault 40 |
| 49 | Minor low airflow pipe 2 | Minor Fault: VZ001 | Refer to Fault 41 | Refer to Fault 41 |
| 50 | Major low airflow pipe 2 | Urgent Fault: VZ001 | Refer to fault 42 | Refer to fault 42 |
| 51 | Major high airflow pipe 1 | Urgent Fault: VZ001 | Refer to Fault 39 | Refer to Fault 39 |
| 52 | Minor high airflow pipe 1 | Minor Fault: VZ001 | Refer to Fault 40 | Refer to Fault 40 |
| 53 | Minor low airflow pipe 1 | Minor Fault: VZ001 | Refer to Fault 41 | Refer to Fault 41 |
| 54 | Major low airflow pipe 1 | Urgent Fault: VZ001 | Refer to fault 42 | Refer to fault 42 |

| No. | Fault Description | Control Panel Event Message | Cause | Action |
|---|---|---|---|---|
| 55 | More than one power supply in the same power zone | Minor Fault: VZ001 | More than one power supply has been detected in one power zone. | Ensure "Power Supply" menu option is set to Zone 0 if a VESDA Intelligent power supply is being used.<br>**Note:** This fault relates to the intelligent power supply unit. For other power supply units refer to respective manufacturer's manuals |
| 56 | Clock failed | Minor Fault: VZ001 | The real time clock is not functioning properly. | Contact your Xtralis VESDA support person to rectify the fault. |
| 57 | Display setup = factory defaults | Minor Fault: VZ001 | The display is operating with the default configuration. | The system Administrator is required to OK the use of the defaults. Refer to the Xtralis VESDA LCD Programmer Guide or the PC Software online Help. If the problem persists, call your Xtralis VESDA support person. |
| 58 | Too many scans in a given period | Minor Fault: VZ001 | There have been more than 500 auto scans have taken place in a seven day period. | To clear fault reset. Increase the scan threshold by setting a higher alert threshold. |
| 59 | Fault Test | Urgent Fault: VZ001 | A fault test is currently is progress. | This fault will cease when the fault test has finished. You can clear the fault by prematurely ending the test. |
| 60 | Battery charger failure | Minor Fault: VZ001 | The power supply has a hardware failure. | Call your Xtralis VESDA support person to repair or replace the power supply.<br>Note: This fault relates to the intelligent power supply unit. For other power supply units refer to respective manufacturer's manuals |
| 61 | Power supply fuse failure | Urgent Fault: VZ001 | The DC output fuse in the power supply has failed. | Call your Xtralis VESDA support person to replace the fuse.<br>Note: This fault relates to the intelligent power supply unit. For other power supply units refer to respective manufacturer's manuals |
| 62 | Power supply PIC failure | Urgent Fault: VZ001 | The power supply preprocessor has failed. | Return the power supply to your Xtralis VESDA support person so that it can be repaired or replaced.<br>Note: This fault relates to the intelligent power supply unit. For other power supply units refer to respective manufacturer's manuals |

| No. | Fault Description | Control Panel Event Message | Cause | Action |
|---|---|---|---|---|
| 63 | No communication from power supply | Urgent Fault: VZ001 | A detector has not received the regular 'health check' message from its power supply.<br>The power supply or detector may not be con figured correctly or the wiring may be faulty.<br>Alternatively, the power supply in the zone may have failed. | Call your Administrator to check the configuration of the system.<br>Arrange for the wiring to be checked. If the configuration and wiring are OK, call your Xtralis VESDA support person to repair the power supply.<br>**Note:** This fault relates to the intelligent power supply unit. For other power supply units refer to respective manufacturer's manuals |
| 64 | Power supply output relay failed | Urgent Fault: VZ001 | One of the relays in the power supply is not functioning correctly. | Return the power supply to your Xtralis VESDA support person so that it can be repaired or replaced.<br>**Note:** This fault relates to the intelligent power supply unit. For other power supply units refer to respective manufacturer's manuals |
| 65 | Incompatible software version detected | Minor Fault: VZ001 | Some of the devices on the system have different versions of software. | Call your Xtralis VESDA support person to assist you in determining which software ver- sions are compatible. |
| 66 | Minimum status report period too short | Minor Fault: VZ001 | The parameter Min Intvl has been set too low when compared with the number of devices in the system. | You must call your Xtralis VESDA support person to reset the Min Intvl. Refer to the *Xtralis VESDA LCD Programmer Guide* or the *PC Software online Help*. |
| 67 | Configured network delay too short | Minor Fault: VZ001 | The time allowed for a device to send a mes- sage around the net- work is too short. | Arrange for your Xtralis VESDA support per- son to reset the Network Delay. Refer to the *Xtralis VESDA LCD Programmer Guide* or the *PC Software online Help*. |
| 68 | HLI setup = factory defaults | Minor Fault: VZ001 | The HLI is operating with the default con- figuration. | The system Administrator is required to OK the use of the defaults or to alter the user list. Refer to the *Xtralis VESDA LCD Programmer Guide* or the *PC Software online Help*. If the problem persists, call your Xtralis VESDA support person. |

| No. | Fault Description | Control Panel Event Message | Cause | Action |
|---|---|---|---|---|
| 69 | Reference detector has reference | Minor Fault: VZ001 | A Reference Detector is using another Detector as a reference. Loops or chains of Reference Detectors are not sup- ported. | Call the system Administrator to reconfigure the Reference Detector. |
| 70 | Reference misconfigured | Not Used. | | |
| 71 | Too many LC modules in VESDAnet zone | Not Used. | | |
| 72 | LC module = factory defaults | Minor Fault: VZ001 | The LC Module is operating with the default configuration. | The Administrator should okay the use of default settings. |
| 73 | Filter Clogged | Urgent Fault: VZ001 | This fault will be generated if dust count exceeds dust limit or the filter Service Interval has expired. | Filter must be urgently replaced and reset filter count. |
| 74 | Flow too high for detector | Not Used. | | |
| 75 | Normalization failed | Minor Fault: VZ001 | This fault will occur if air normalization has been unsuccessful | Ensure at least one exhaust port is open<br>Check the number of pipes selected as "in use"<br>Re-try air normalization. If fault persists contact your Administrator<br>If fault occurs at commissioning ensure pipe has airflow of >20 liters per minute. The fault may be caused by surplus air from an area with a relatively high or low pressure. Consider venting the exhaust back into the protected area to balance the pressure across the detector |
| 76 | Filter replaced but not acknowledged | Minor Fault: VZ001 | The filter on a Detector has physically been replaced but not acknowledged in the software. | Acknowledge filter change in software<br>Call your Administrator to check the positioning of the filter<br>**Note:** If a new filter has not been fitted DO NOT reset the filter monitoring data |

| No. | Fault Description | Control Panel Event Message | Cause | Action |
|---|---|---|---|---|
| 77 | Normalization in progress | Minor Fault: VZ001 | Normalization is currently in progress on the detector. | This fault is generated as a reminder that the detectors normalizing the air flow. This will clear when normalization completes. If the devices have been programmed as non- latching, the fault will be cleared when the device is removed. If however the devices have been programmed as latching it is necessary to reset after the fault is generated |
| 78 | No sliding windows dial-out dial string setup | Minor Fault: VZ001 | This fault is generated if the HLI attempts to dial out without having a dial up number configured in the modem configuration | Ensure that a dial up number is con figured in the dial-out HLI |
| 79 | Dial failed | Minor Fault: VZ001 | This fault occurs if the HLI fails to dial out using either of the dial up numbers configured in the modem configuration | Ensure modem is powered up and connected<br>Ensure modem is configured to a baud rate of 19200<br>Test the receiving station |
| 80 | Flow calibration corrupted | Not Used. | | |
| 81 | Default variant configuration in use | Not Used. | | |
| 82 | Major fault valve closed – pipe 1 | Urgent Fault: VZ001 | The Scanner Valve is not fully open and may be preventing the free flow of sampled air. | Check inlet ports for obstruction. Perform manual scan to check normal operation if cleared.<br>Contact your Xtralis VESDA support person for technical support if fault persists. |
| 83 | Minor fault valve open – pipe 1 | Minor Fault: VZ001 | The scanner valve is stuck in the open position. The sector scan feature of the VLS detector is non-functional | Check inlet ports for obstruction. Perform manual scan to check normal operation if cleared.<br>Contact your Xtralis VESDA support person for technical support if fault persists. |
| 84 | Major fault valve closed – pipe 2 | Urgent Fault: VZ001 | Refer to Fault 82 | Refer to Fault 82 |
| 85 | Minor fault valve open – pipe 2 | Minor Fault: VZ001 | Refer to Fault 83 | Refer to Fault 83 |

| No. | Fault Description | Control Panel Event Message | Cause | Action |
|---|---|---|---|---|
| 86 | Major fault valve closed – pipe 3 | Urgent Fault: VZ001 | Refer to Fault 82 | Refer to Fault 82 |
| 87 | Minor fault valve open – pipe 3 | Minor Fault: VZ001 | Refer to Fault 83 | Refer to Fault 83 |
| 88 | Major fault valve closed – pipe 4 | Urgent Fault: VZ001 | Refer to Fault 82 | Refer to Fault 82 |
| 89 | Minor fault valve open – pipe 4 | Minor Fault: VZ001 | Refer to Fault 83 | Refer to Fault 83 |

The actual fault codes for the VESDA-E series detectors (VEU, VEA, VEP) cannot be directly reported through the HLI to the Cheetah Xi or CyberCat panels. In addition, the VESDA-E series detectors cannot be mapped to the standard VESDA fault codes (0-89). Instead, the fault codes generated by the VESDA-E series detectors are mapped to one of the following newly created VESDA-E fault codes, which can be reported through the HLI.

The table below lists all the faults that will be transmitted by the VESDA HLI to the Cheetah Xi and CyberCat control panels along with the fault description associated Fike control panel message, cause of the fault, and action required to fix the fault. Depending upon the type of fault, the Fike control panel will display either an “URGENT FAULT” or “MINOR FAULT” message in response to the fault.

| No. | Fault Description | Control Panel Event Message | Cause | Action |
|---|---|---|---|---|
| 90 | Aspirator failed | Urgent Fault: VZ001 | The detector’s aspirator is not working. | Call your VESDA support person to replace the aspirator. |
| 91 | General detector fault | Urgent Fault: VZ001 or Minor Fault: VZ001 | Use the VESDA VSC software to identify the actual detector fault code(s). | Refer to VSC software HELP file for potential resolution. |
| 92 | High or Low air flow affecting system flow | Urgent Fault: VZ001 | | |
| 93 | Detector filter requires replacement | Urgent Fault: VZ001 | | |
| 94 | Detector has a fault on its field wiring | Minor Fault: VZ001 | | |
| 95 | Detector aspirator not working | Urgent Fault: VZ001 | | |
| 96 | Power supply failure | Urgent Fault: VZ001 | | |
| 97 | Detector smoke sensor module has a fault condition | Urgent Fault: VZ001 | | |
| 98 | Detector module has a fault condition | Minor Fault: VZ001 | | |

The actual fault codes for the VESDA VFT-15 detector cannot be directly reported through the HLI to the Cheetah Xi or CyberCat panels. Instead, the fault codes generated by the VFT detector are mapped to one of the standard VESDAnet faults (0-89) that can be reported through the HLI. The table below lists all the mapped faults associated with the VESDA VFT-15 detector, which differ slightly from the standard VESDA fault codes.

The table below lists all the faults that will be transmitted by the VESDA HLI to the Cheetah Xi and CyberCat control panels along with the fault description associated Fike control panel message, cause of the fault, and action required to fix the fault. Depending upon the type of fault, the Fike control panel will display either an “URGENT FAULT” or “MINOR FAULT” message in response to the fault.

| No. | Fault Description | Control Panel Event Message | Cause | Action |
|---|---|---|---|---|
| 0 | Aspirator failed | Urgent Fault: VZ001 | Use the VESDA VSC software to identify the actual detector fault code(s). | Refer to VSC software HELP file for potential resolution. |
| 1 | Power supply battery failure | Urgent Fault: VZ001 | | |
| 15 | AC mains fail | Minor Fault: VZ001 | | |
| 23 | LASER Signal too low | Urgent Fault: VZ001 | | |
| 29 | Configuration checksum fault | Urgent Fault: VZ001 | | |
| 36 | Logging memory fault | Minor Fault: VZ001 | | |
| 37 | Detector EEPROM fault | Urgent Fault: VZ001 | | |
| 47 | Detector airflow high fault | Urgent Fault: VZ001 | | |
| 48 | Detector airflow high warning | Minor Fault: VZ001 | | |
| 49 | Detector airflow low warning | Minor Fault: VZ001 | | |
| 50 | Detector airflow low fault | Urgent Fault: VZ001 | | |
| 51 | Sector airflow high fault | Urgent Fault: VZ001 | | |
| 52 | Sector airflow high warning | Minor Fault: VZ001 | | |
| 53 | Sector airflow low warning | Minor Fault: VZ001 | | |
| 54 | Sector airflow low fault | Urgent Fault: VZ001 | | |

| No. | Fault Description | Control Panel Event Message | Cause | Action |
|---|---|---|---|---|
| 58 | Trace pressure fault | Minor Fault: VZ001 | Use the VESDA VSC software to identify the actual detector fault code(s). | Refer to VSC software HELP file for potential resolution. |
| 63 | Remote panel comms fault | Urgent Fault: VZ001 | | |
| 64 | Suppression control fault | Urgent Fault: VZ001 | | |
| 71 | Module ID fault | Minor Fault: VZ001 | | |
| 72 | Module I/O fault | Minor Fault: VZ001 | | |
| 82 | Rotary valve fault | Urgent Fault: VZ001 | | |



Fike®

## CONTACT US

**Fike World Headquarters**
**704 SW 10th Street**
**Blue Springs, Missouri 64015 USA**
**Tel: +001 816-229-3405**
**Toll Free (US Only): 1-800-YES-FIKE (1-800-937-3453)**
**www.Fike.com**

**For a list of contact information for Fike offices around the world, visit the Global Locations section of Fike.com**